Dear customer,

Thank you for purchasing the SFF time N-ATX case. Please read the full compatibility list before assembling your PC and make sure that your components fit. You can find it on sfftime.com.

If you have any doubts about choosing your components, or steps in this manual, please contact us via email on info@sfftime.com, and we will be glad to assist you.

Important notes:

- always use correct screwdriver tip for corresponding bolts (PH1 or PH2)
- always use correct bolt type
- do not overtighten the bolts
- do not force any components in, each component should be installed without using excessive force

Included with case:

PSU bracket	GPU bracket	HDD side bracket
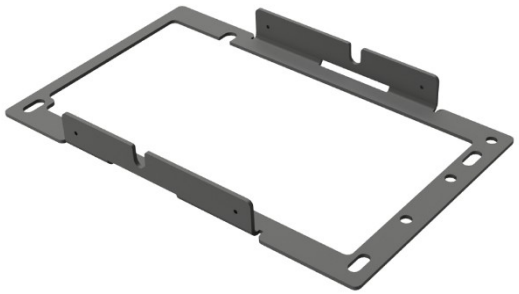		
PCI cover	**Hex tool**	**Mounting hardware**
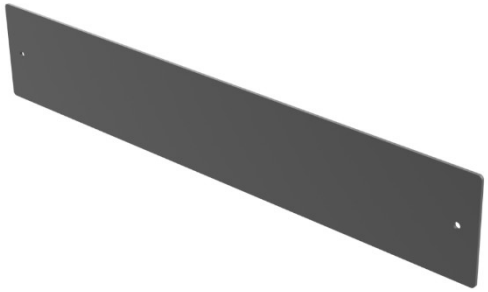	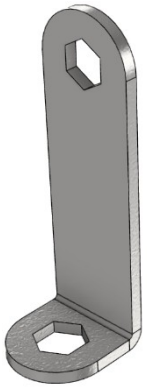	

1. Preparing the case – removing side panels (part 1)

- your case will come with side panels and HDD bracket attached
- you need to remove them before putting other components into the case
- unscrew six bolts that hold side panels, marked in the picture

M3

PH1

4mm

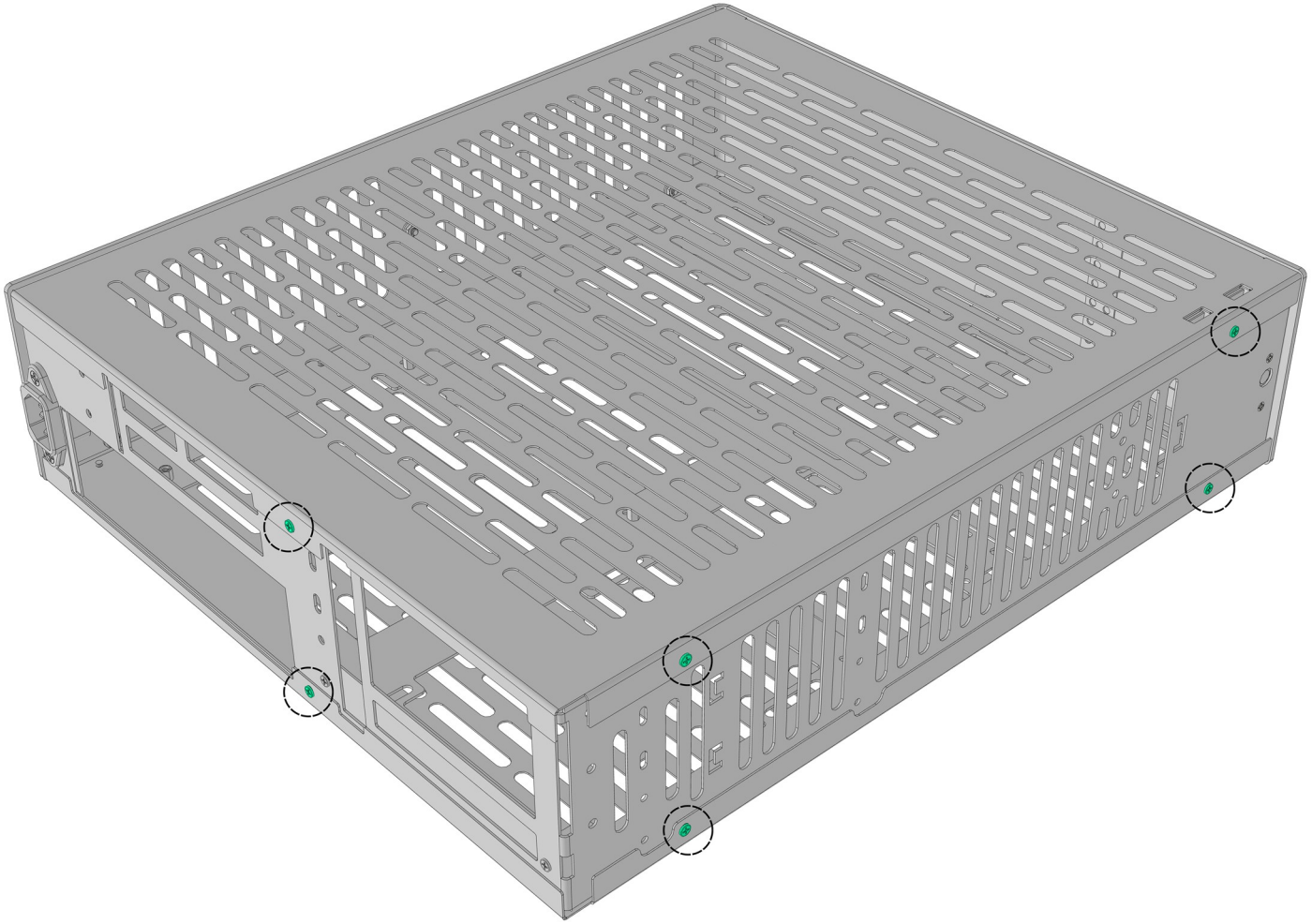

2. Preparing the case – removing side panels (part 2)

- pull side panels towards the back side of the case approximately 1 cm
- lift side panels upwards, away from the case

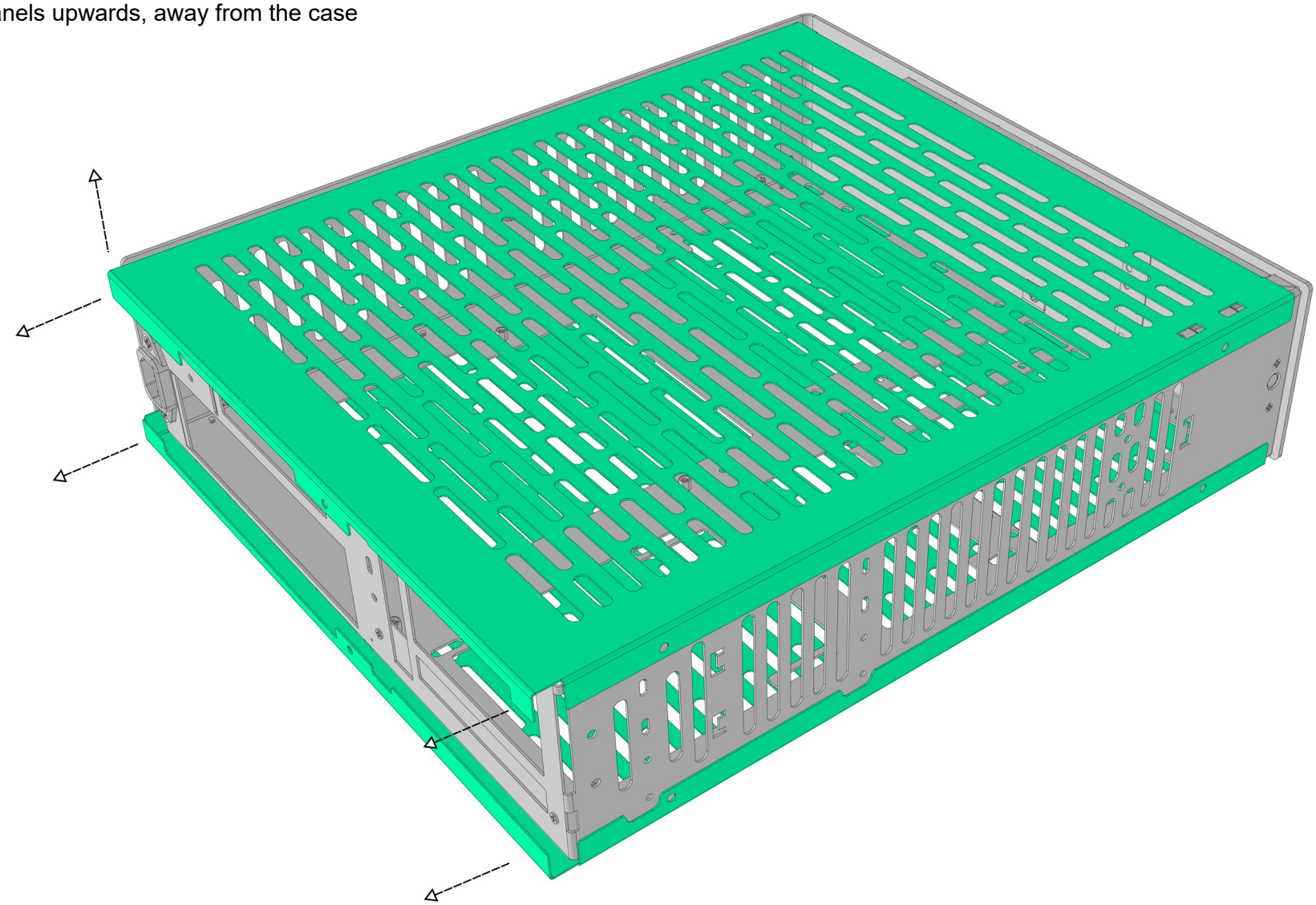

3. Preparing the case – removing HDD bracket (part 1)

- unscrew nut that holds HDD bracket using provided tool or with 5.5 mm socket or wrench and **save it for later use**

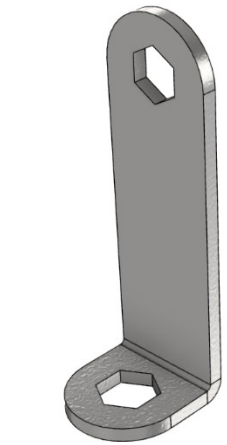

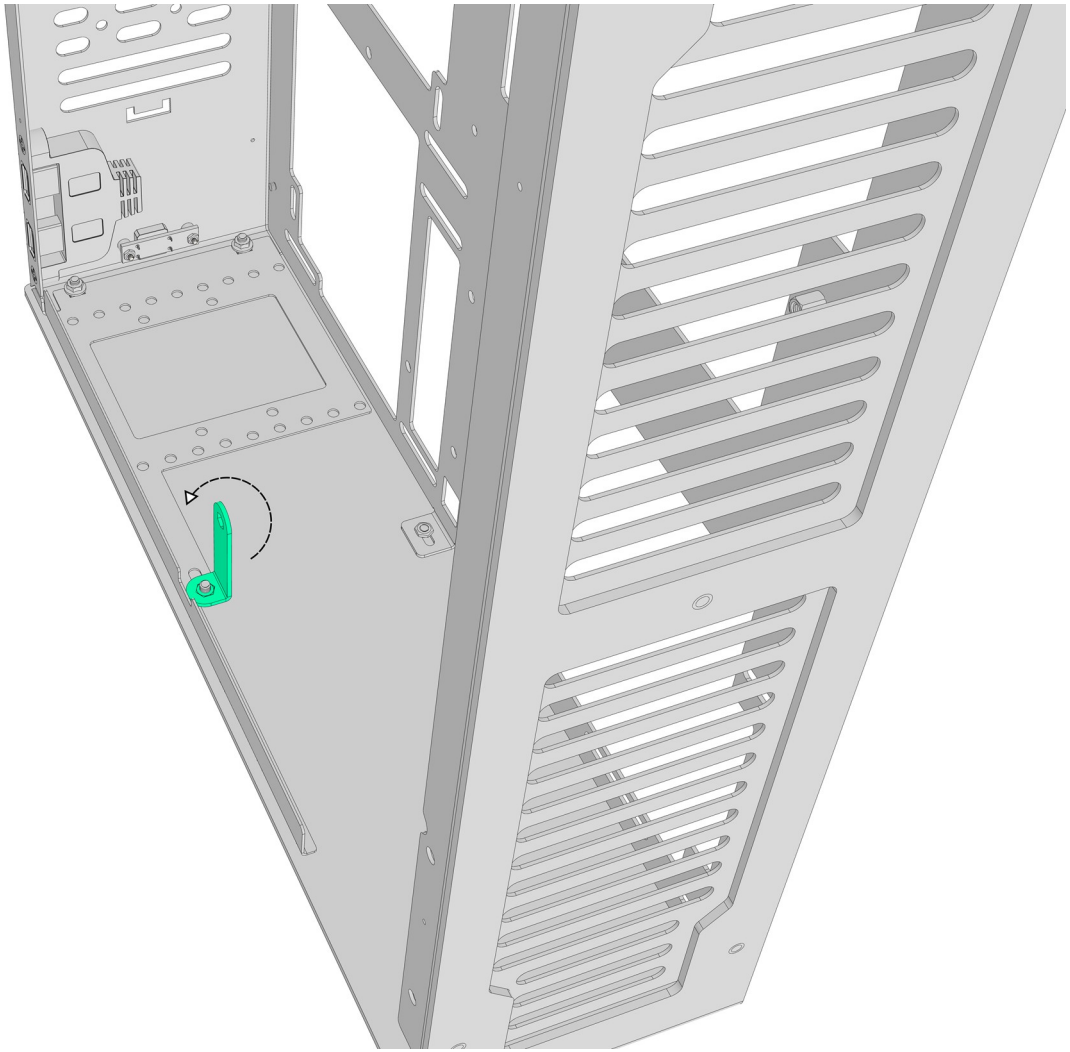

4. Preparing the case – removing HDD bracket (part 2)

- slide HDD bracket towards the top of the case, and lift it up
- remove the **washer** that sits under the bracket and **save it for later use**

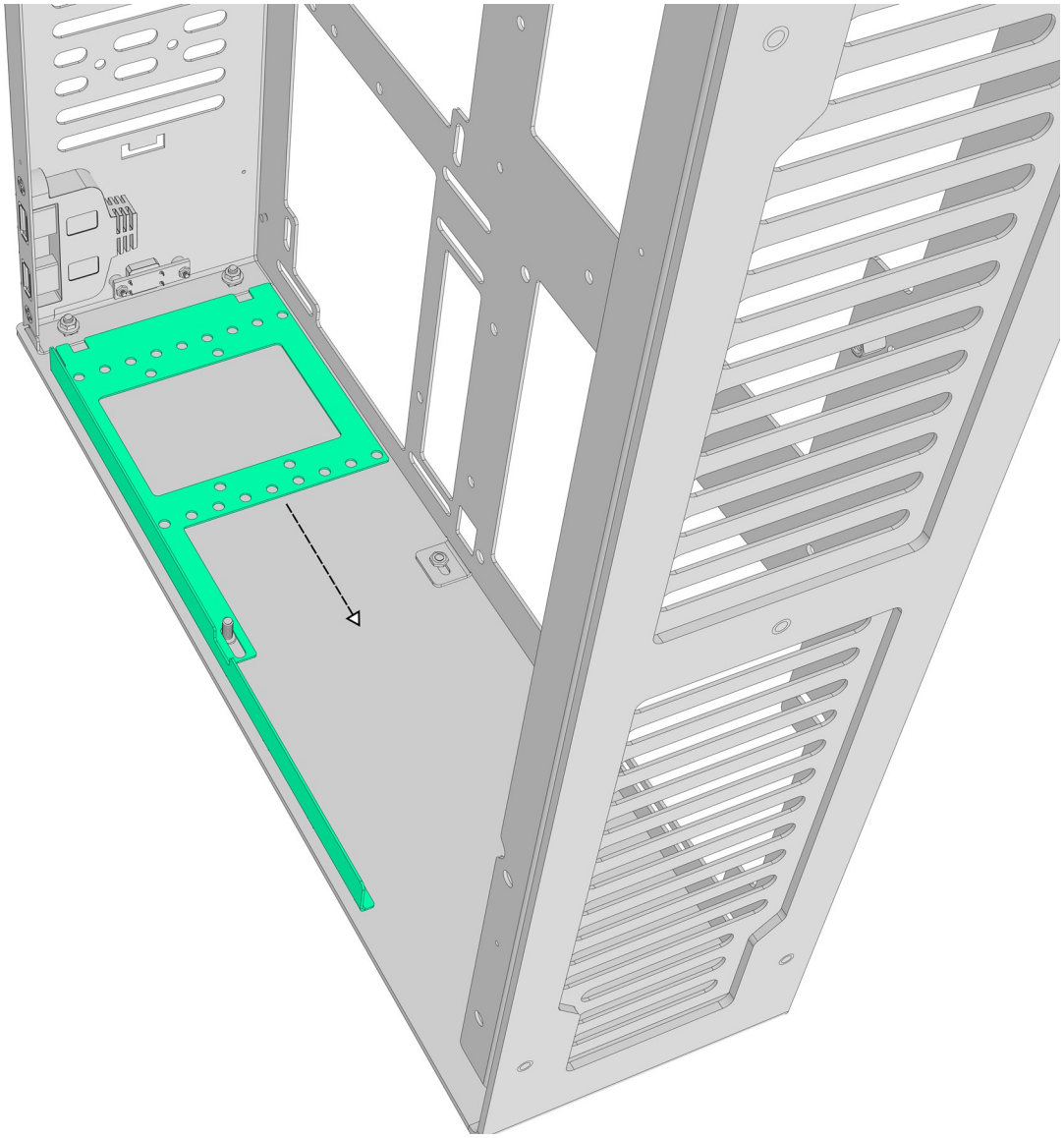

5. Installing the motherboard – preparing standoffs (part 1)

- case comes with standoffs installed for ITX or DTX motherboard. **If you are going to install larger motherboard, please install additional standoffs** (see next page)
- to install standoffs, you need a standoff and bolt that holds it
- screw the standoff to the bolt with your hands
- to tighten the standoff, use a screwdriver and provided tool like shown in the picture

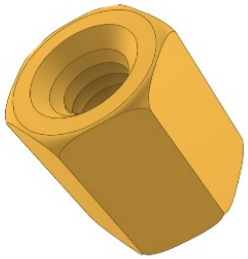

M3

5mm socket

6mm

M3

PH1

4mm

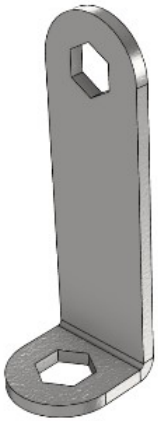

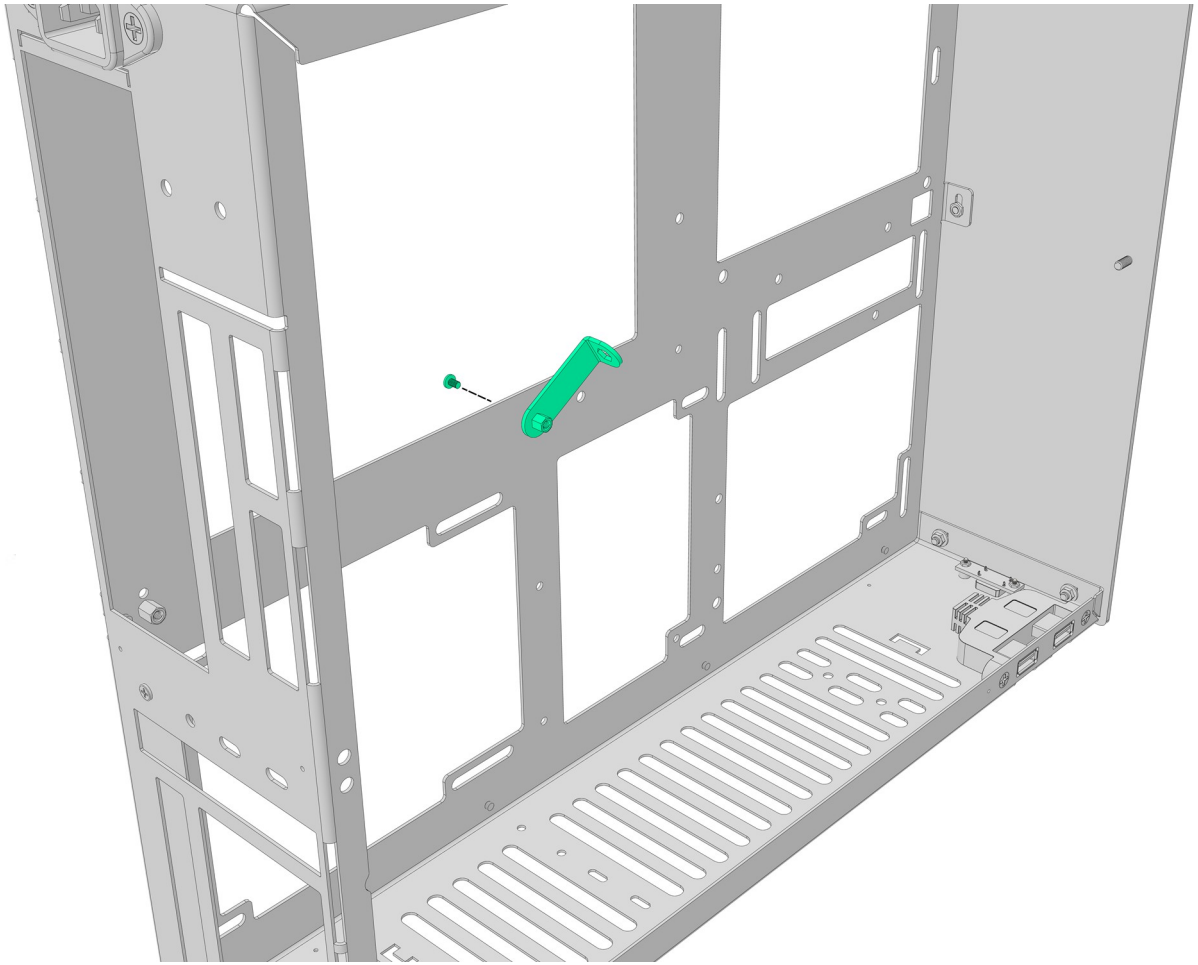

6. Installing the motherboard – preparing standoffs (part 2)

- following pictures show standoff configurations for different motherboard sizes
- always install **correct** standoffs, otherwise you could damage the motherboard

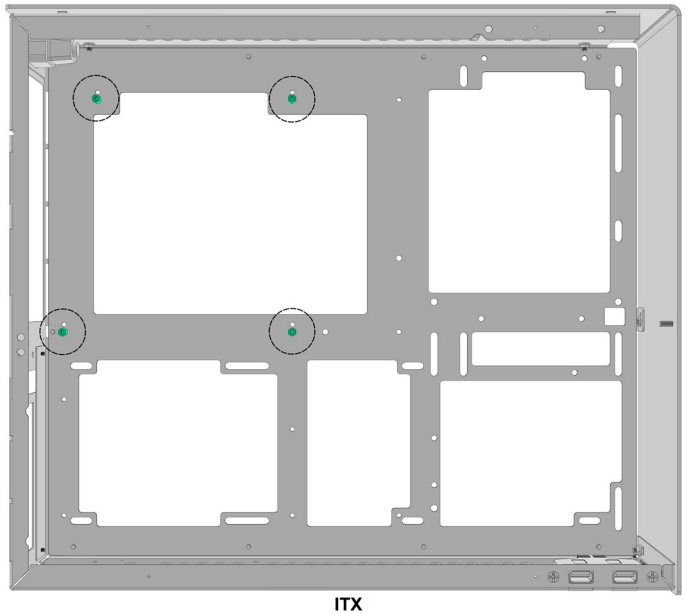

ITX

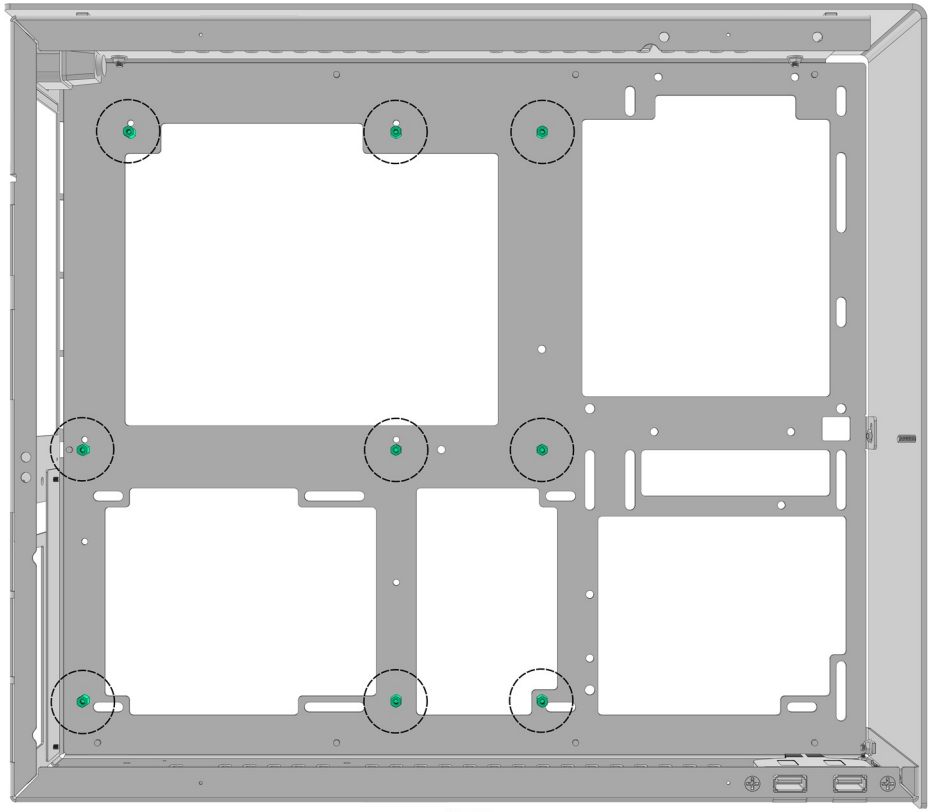

ATX

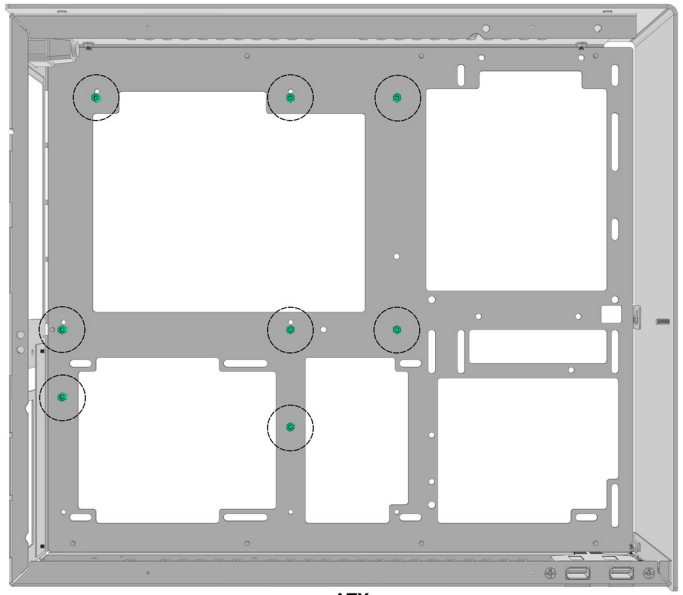

m-ATX

7. Installing ITX motherboard in alternative position - OPTIONAL

- installing ITX motherboard in alternative position (5 mm higher than the standard) **is only necessary when installing 4 slot GPU taller than 135 mm**
- you need to remove the tab at the top of the motherboard IO cutout, and install four motherboard standoffs in alternative position
- to remove the tab, rotate it back and forth until it falls off, and sand down any remaining material with a narrow file
- **do not do this unless you use a tall 4 slot gpu**

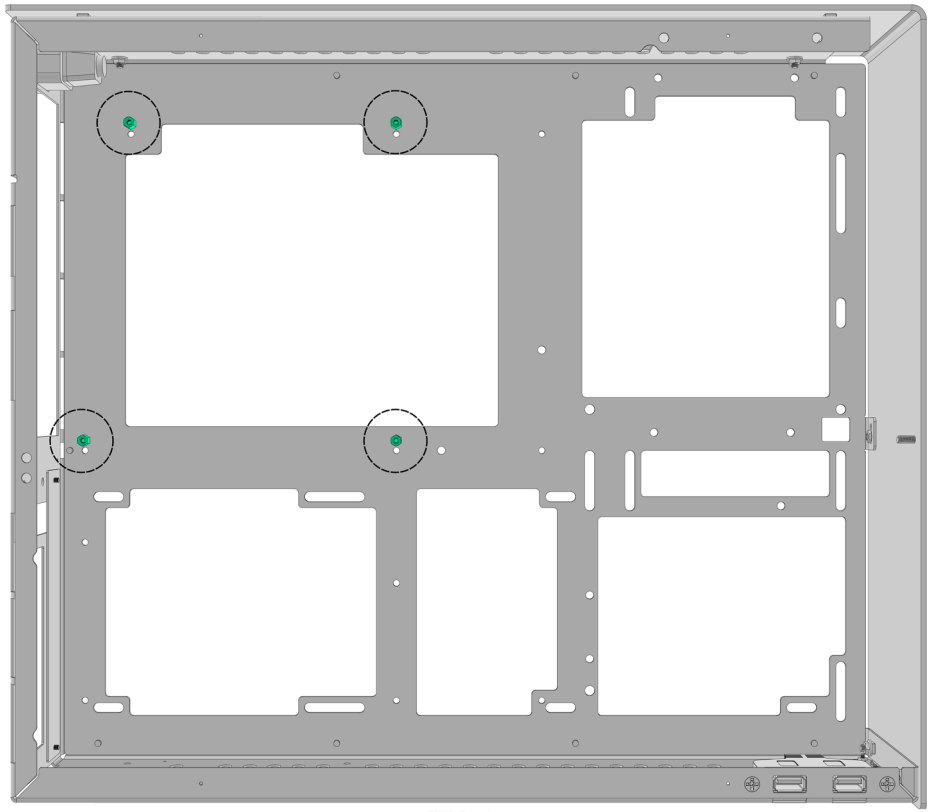

ITX alt

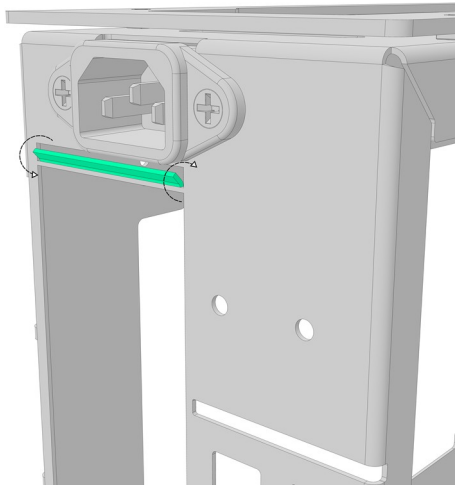

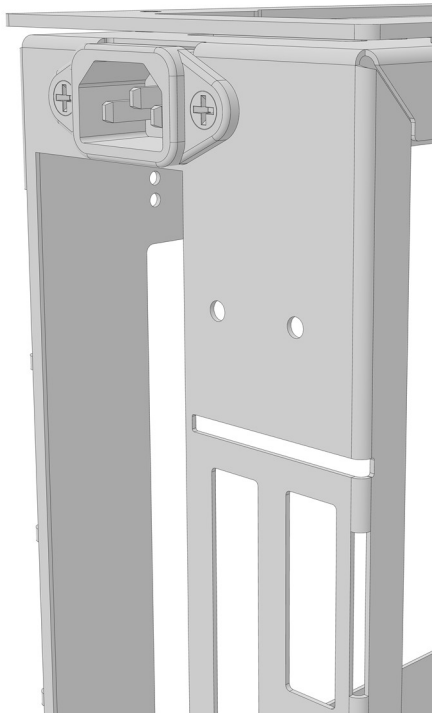

8. Installing the motherboard – bolts and cables

- prepare the motherboard by installing CPU, RAM, M.2 drives, and CPU air cooler if using one
- **install the IO shield**
- align the motherboard on standoffs
- screw the motherboard down using provided bolts
- after installing the motherboard, connect internal USB 3.0 cable and power switch connector
- if you are not sure about motherboard connector positions, please consult its manual

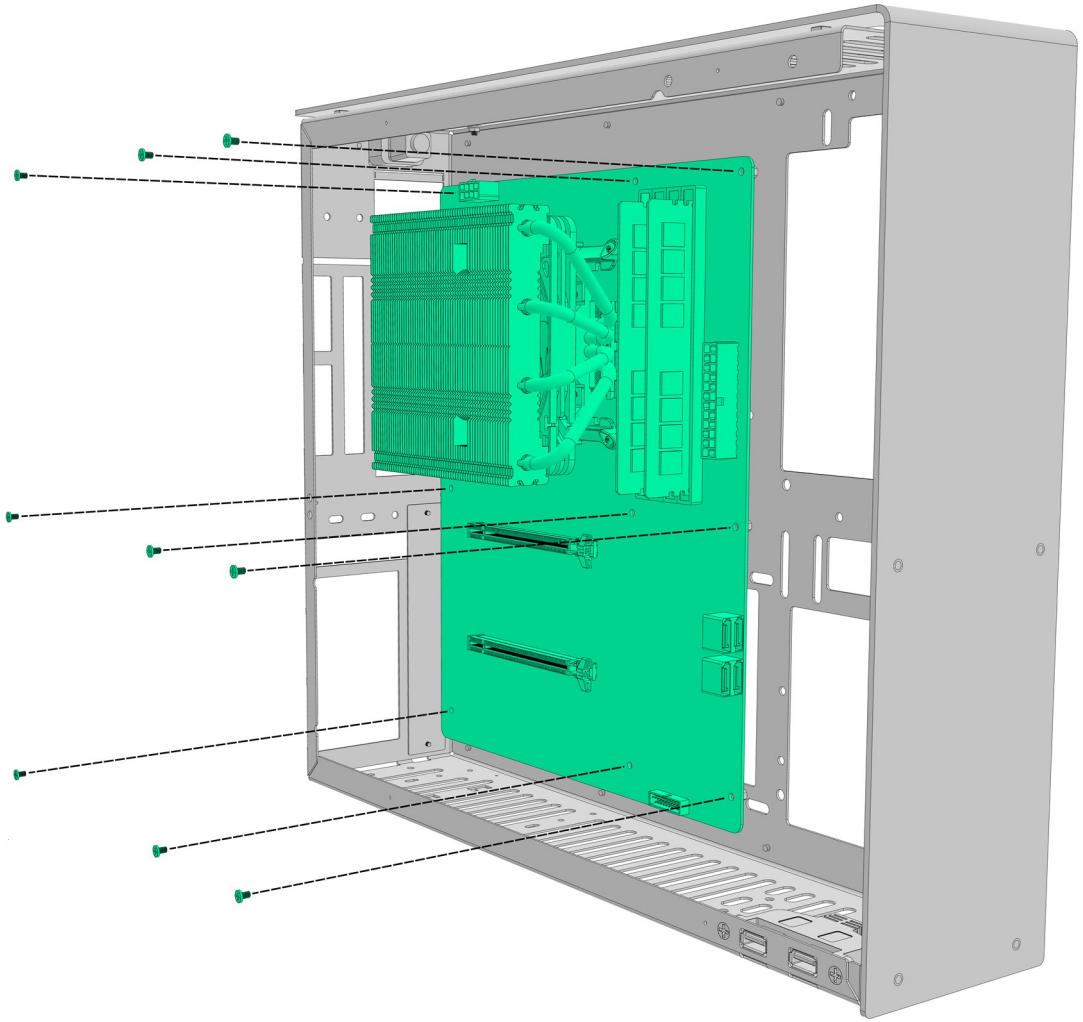

M3

PH1

4mm

9. Installing GPU riser cable – preparing standoffs (up to 3 slot GPU)

- install standoffs the same way as motherboard standoffs, using screwdriver and provided tool
- position standoffs according to your GPU thickness
- this picture shows standoffs installed for 2.3 - 3 slot GPU, positions on the left are for 1 and 2 slot GPUs, while position on the right is for 4 slot GPU

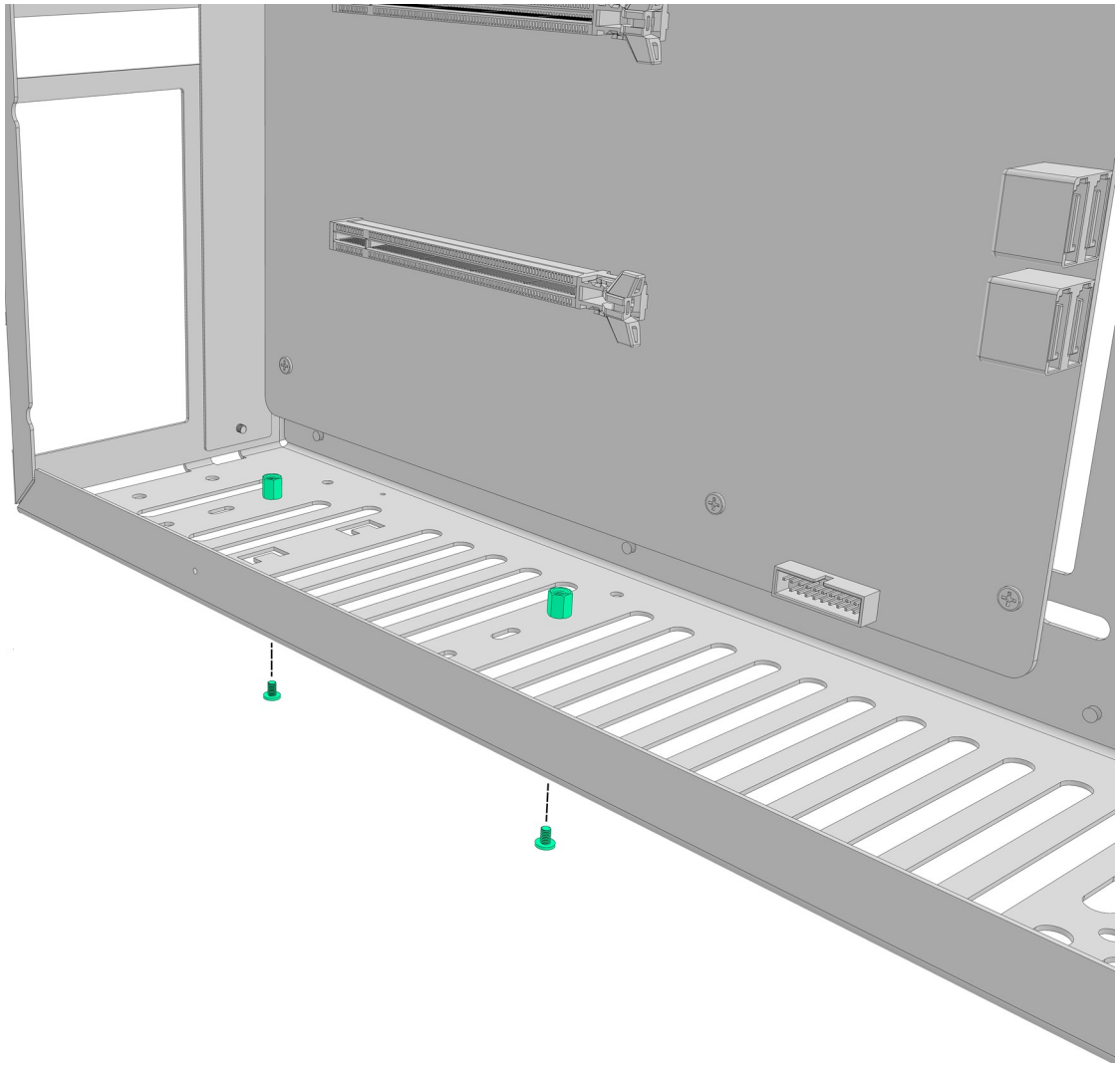

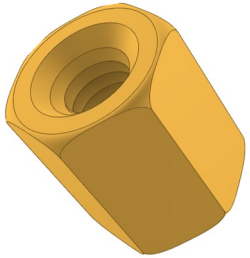

M3

5mm socket

6mm

M3

PH1

4mm

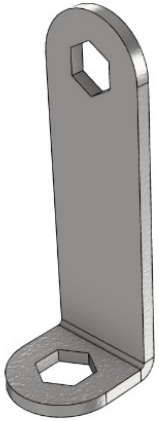

10. Installing GPU riser cable – preparing standoffs (4 slot GPU)

- if using 4 slot GPU install riser standoffs in the rightmost position like shown in the picture
- remove the PCI cover by unscrewing two bolts on the back of the case
- be sure to have ITX motherboard installed in the alternative position if using tall 4 slot GPU

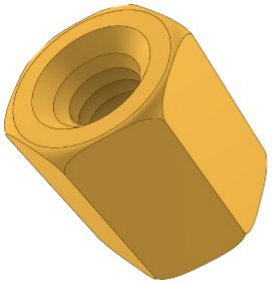

M3

5mm socket

6mm

M3

PH1

4mm

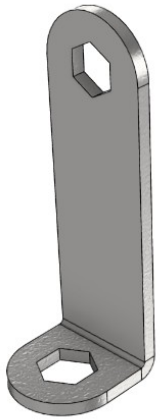

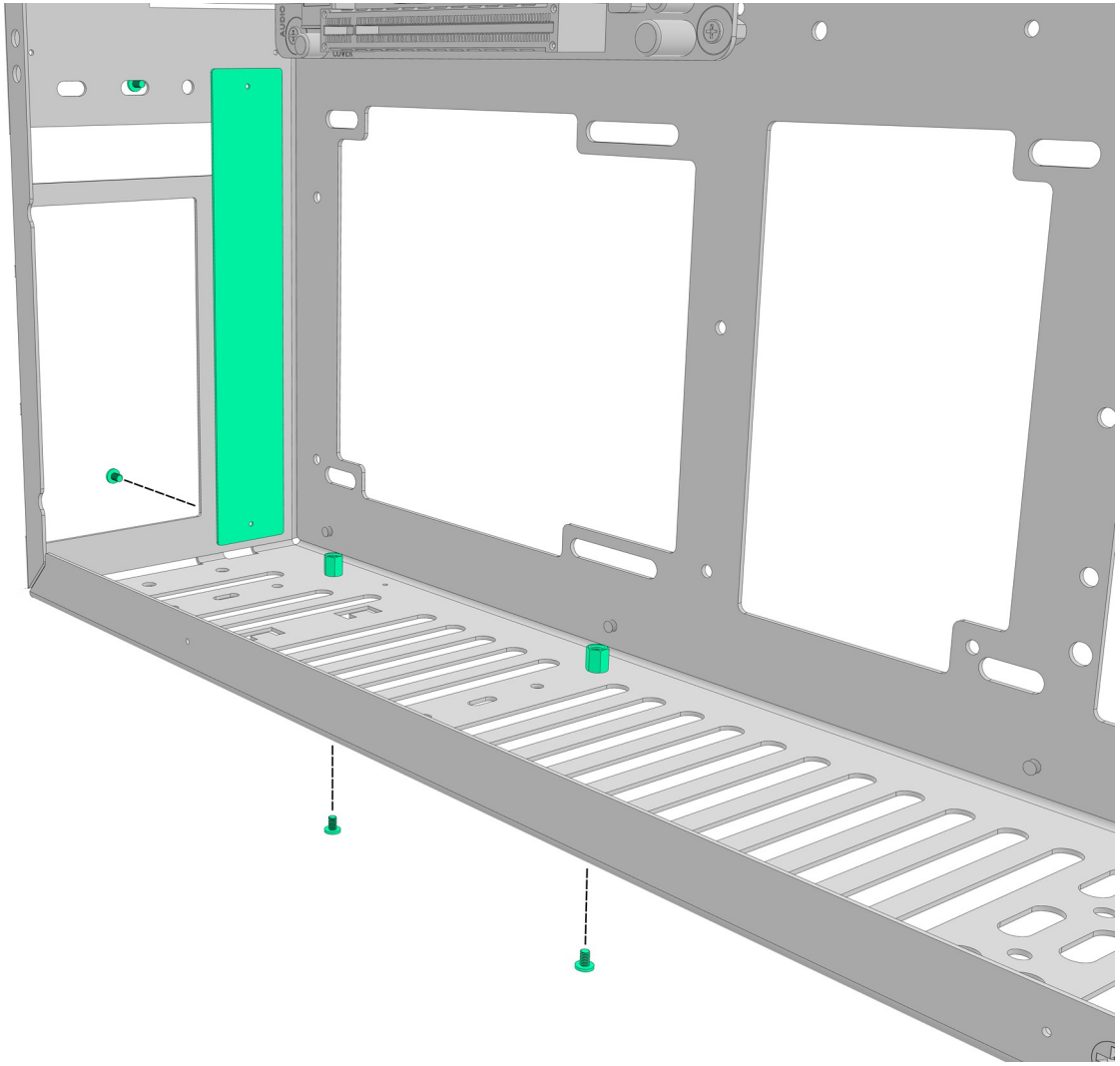

11. Installing GPU riser cable – riser and bolts

- screw down the female end of the riser onto previously installed standoffs
- install the male end of the riser into the motherboard
- depending on your configuration, you may need to **bend the riser like shown in the picture**

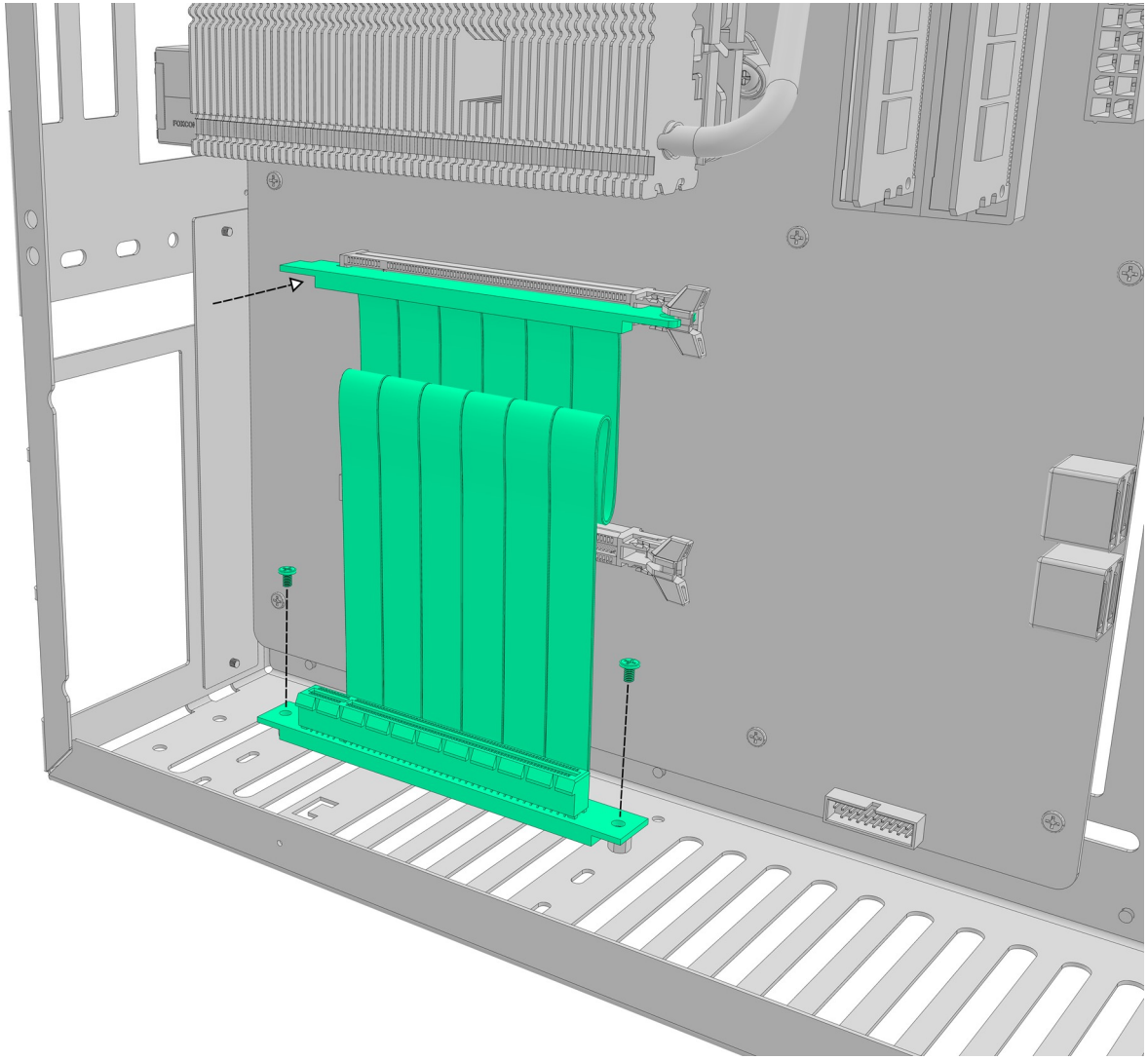

M3

PH1

4mm

12. Installing the GPU – GPU bracket

- before installing the GPU, you need to attach the GPU bracket to the GPU like shown in the picture
- **put a washer under the bolt** that holds the GPU bracket
- screw down the GPU to the GPU bracket
- make sure that the back of the GPU bracket is aligned to the GPU's PCI bracket

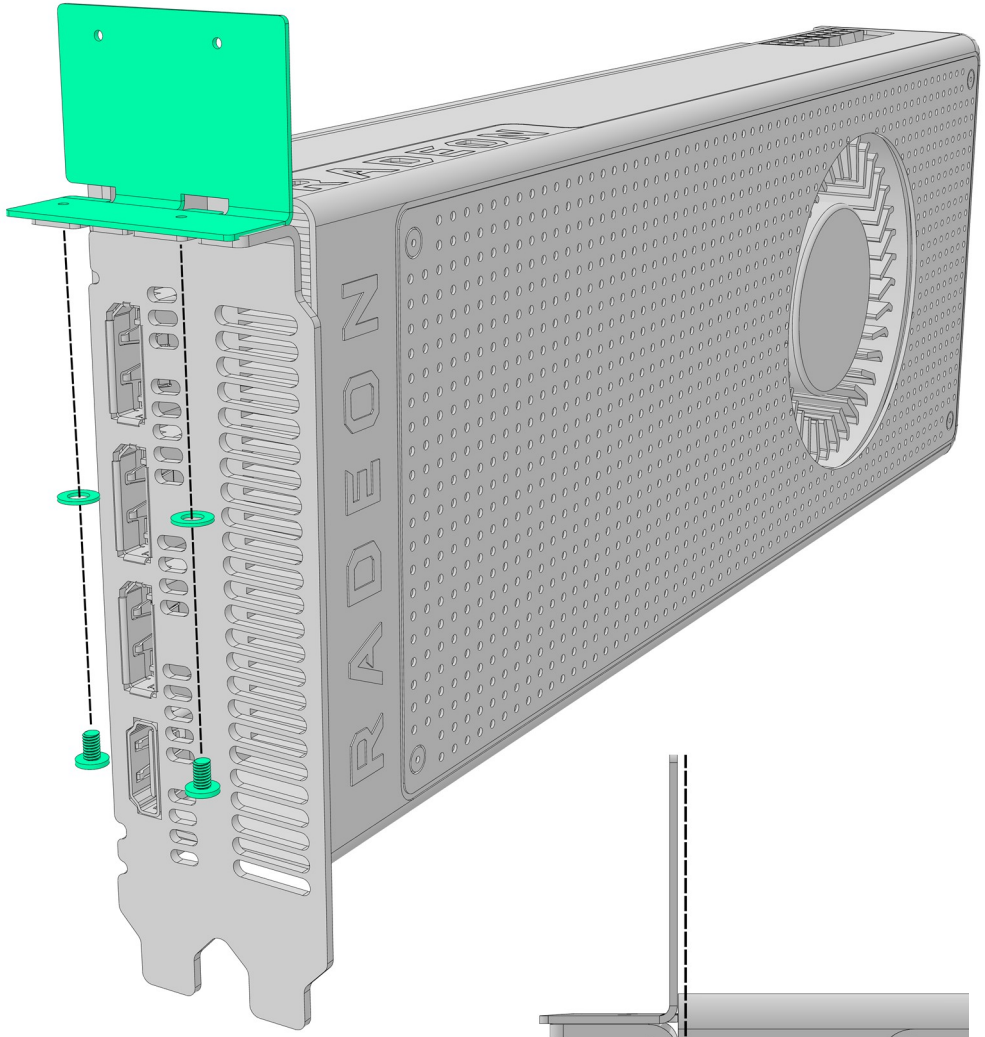

M3

PH1

4mm

M3

0.5mm

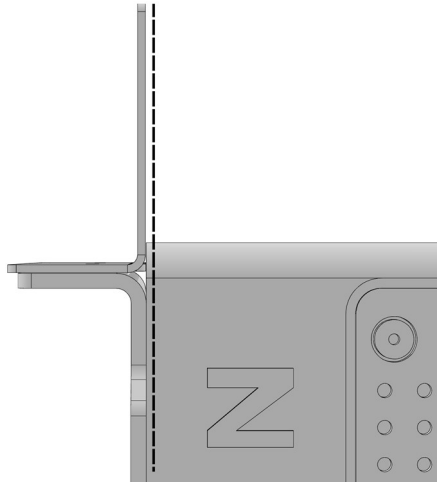

13. Installing the GPU – GPU

- install the GPU into the riser
- be sure that it is fully seated

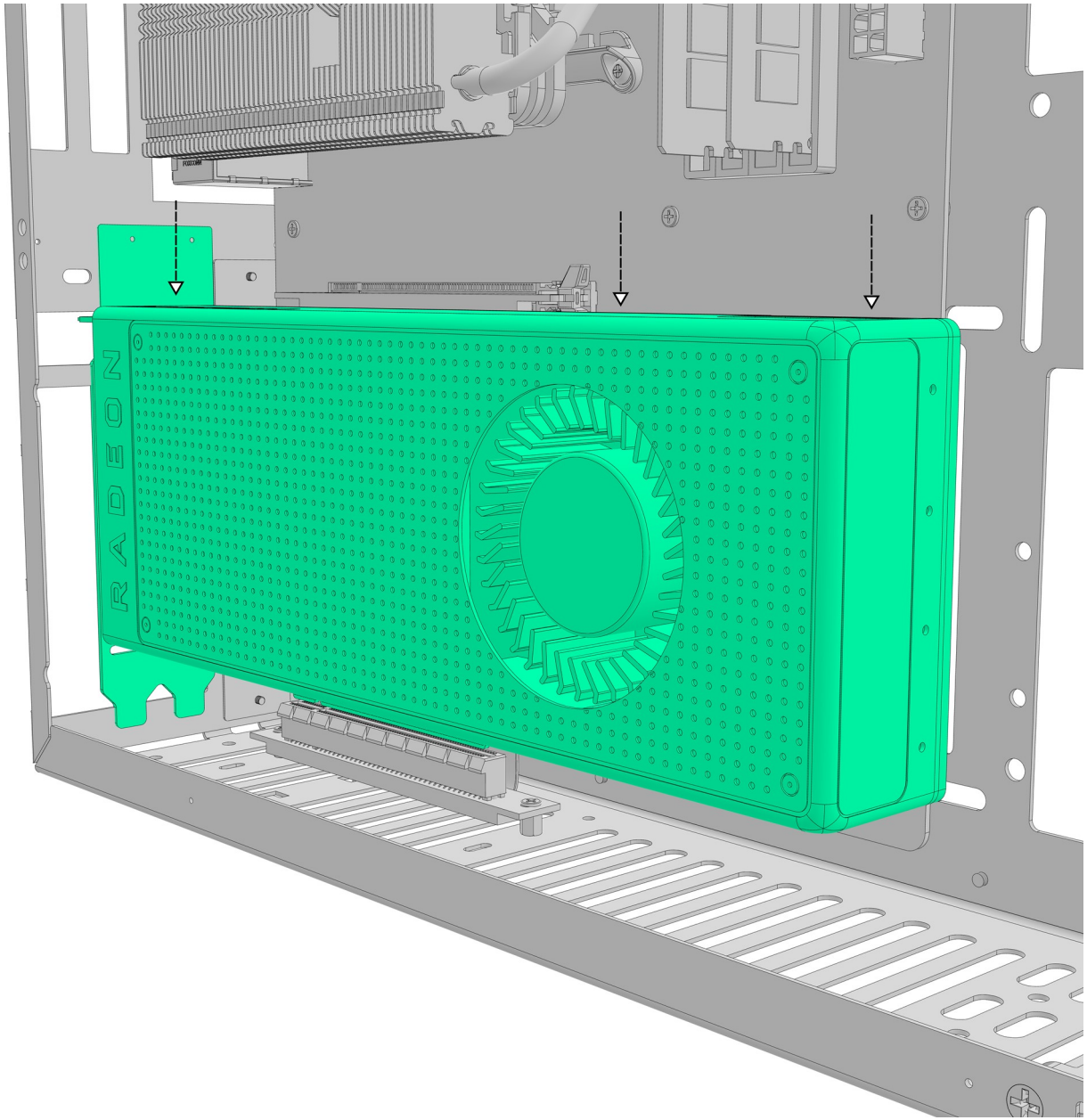

14. Installing the GPU – bolts

- **put a washer under the bolt** that holds the GPU bracket
- screw down the GPU bracket to the case with two bolts

M3

PH1

4mm

M3

0.5mm

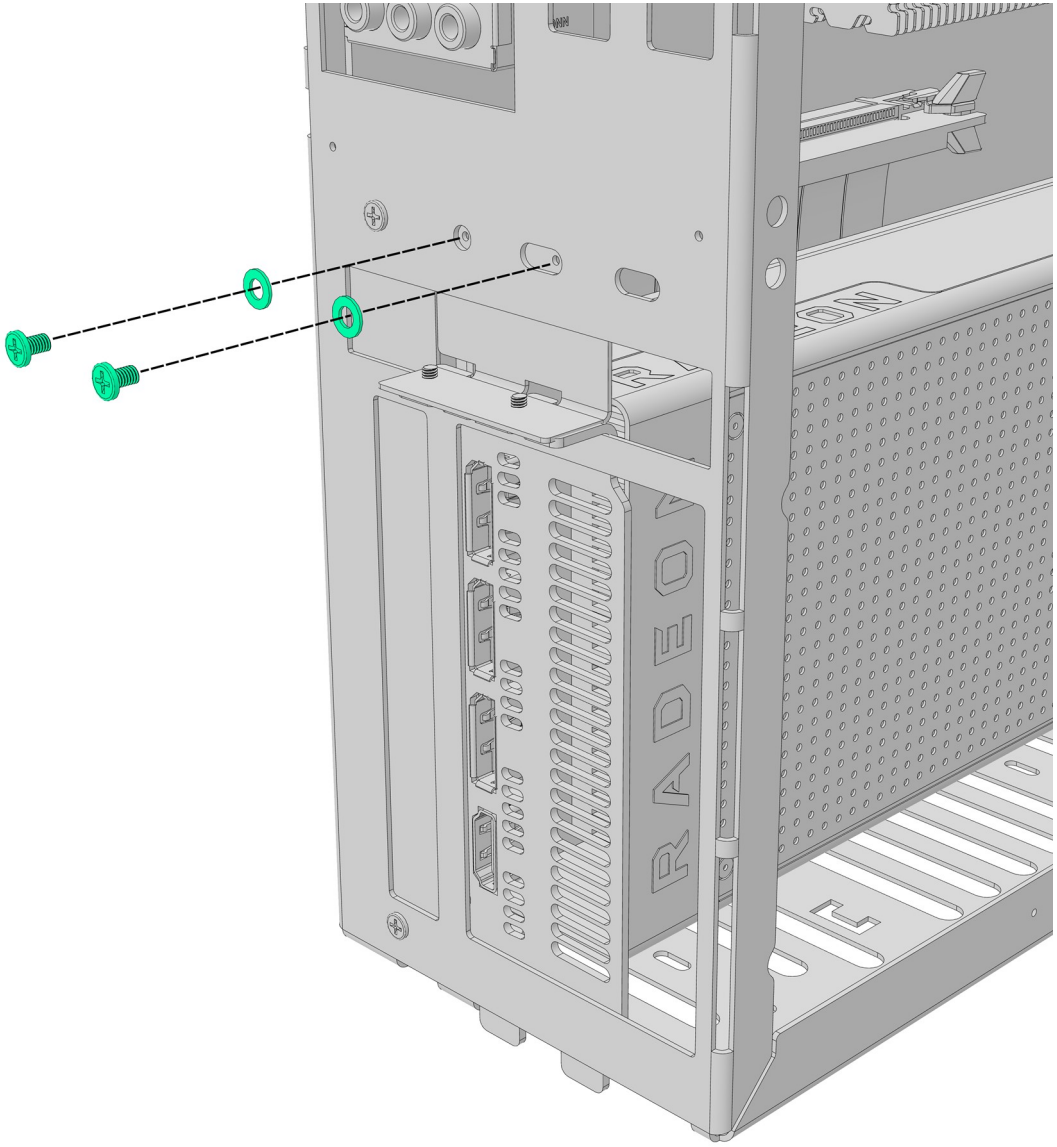

15. Installing the power supply – PSU bracket

- select the power supply orientation:
- for ATX power supplies, rotate both the power supply and the bracket
- for SFX power supplies rotate only the power supply, and orient PSU bracket like shown on the second picture
- put the power supply on a flat surface
- take the power supply mounting bracket and put in next to the power supply like shown in the picture
- bottom of the power supply bracket and the power supply should be on the same level
- screw down the power supply to the bracket using four bolts
- **please use the bolts supplied with your PSU, as they vary in length**

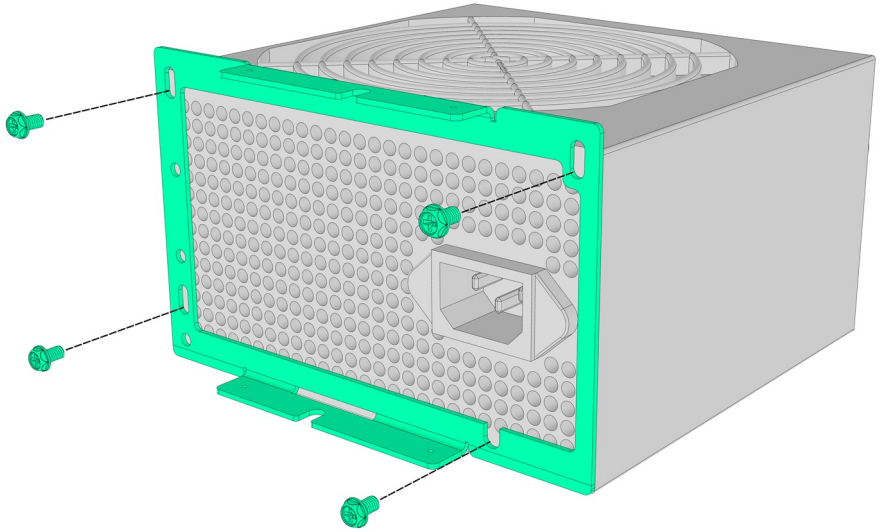

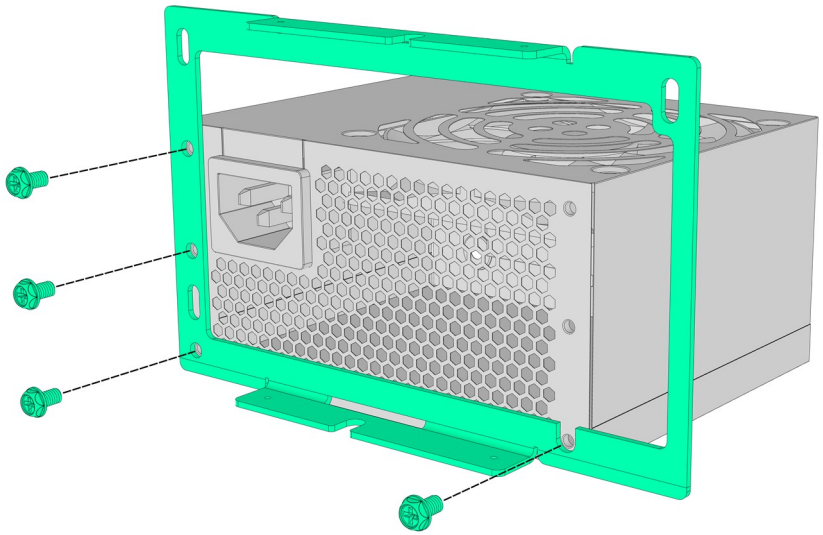

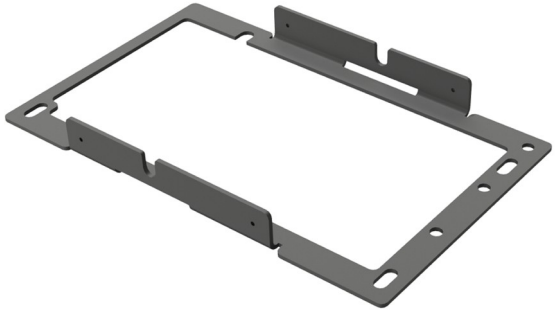

#6-32

PH2

6 mm

16. Installing the power supply – cable

- before installing the power supply into the case, insert male end of the AC cable into the connector on the power supply like shown in the picture
- if using ATX power supply, **make sure that the rear side of the power supply is flush with the motherboard tray after inserting it into the case**, otherwise you won't be able to properly fit the HDD bracket

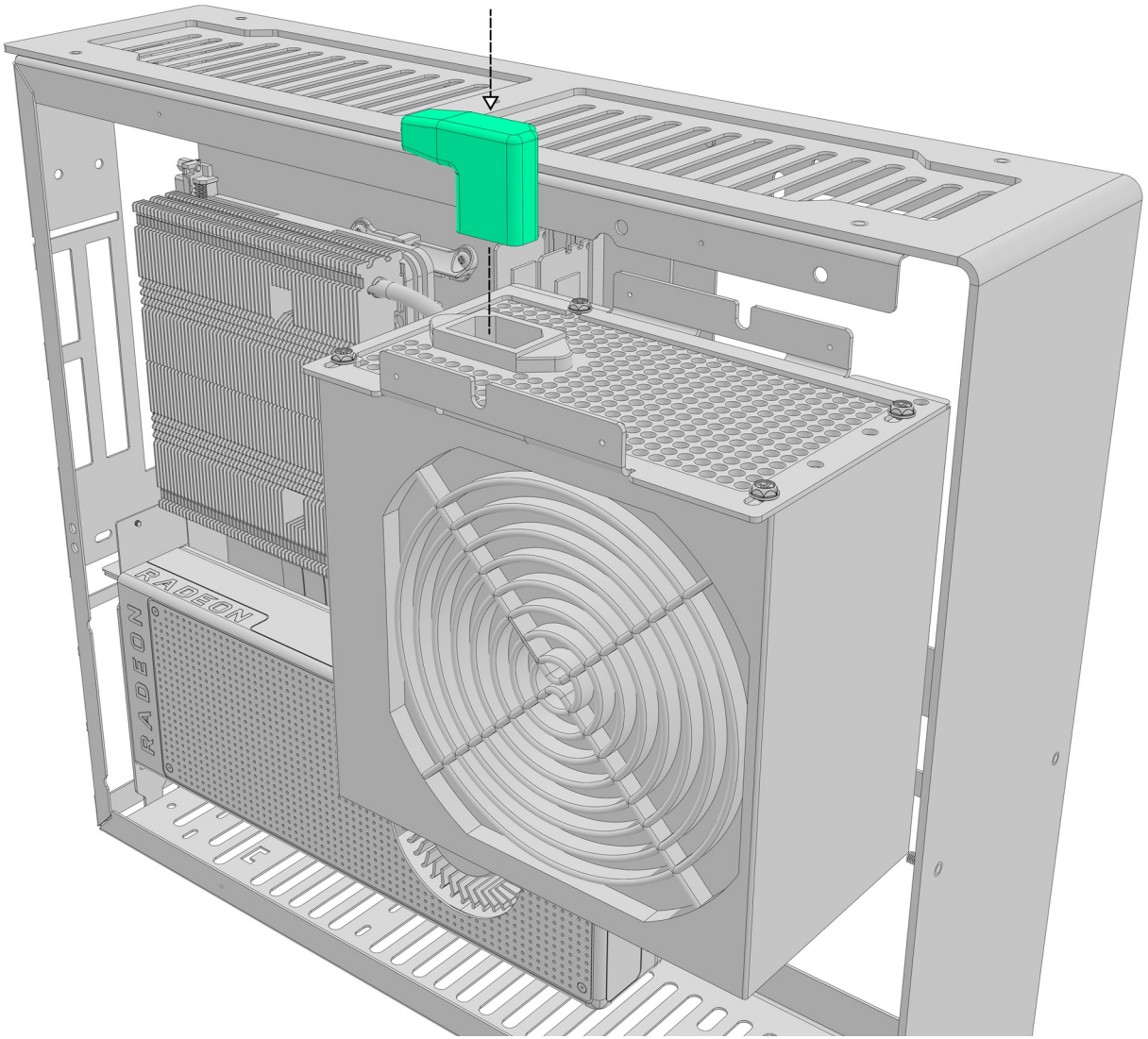

17. Installing the power supply – bolts

- screw the power supply bracket to the case from the front and the back side of the case using four provided **countersunk** screws
- please note that these screws are different than ones used for mounting the motherboard and the GPU

M3

PH1

5mm

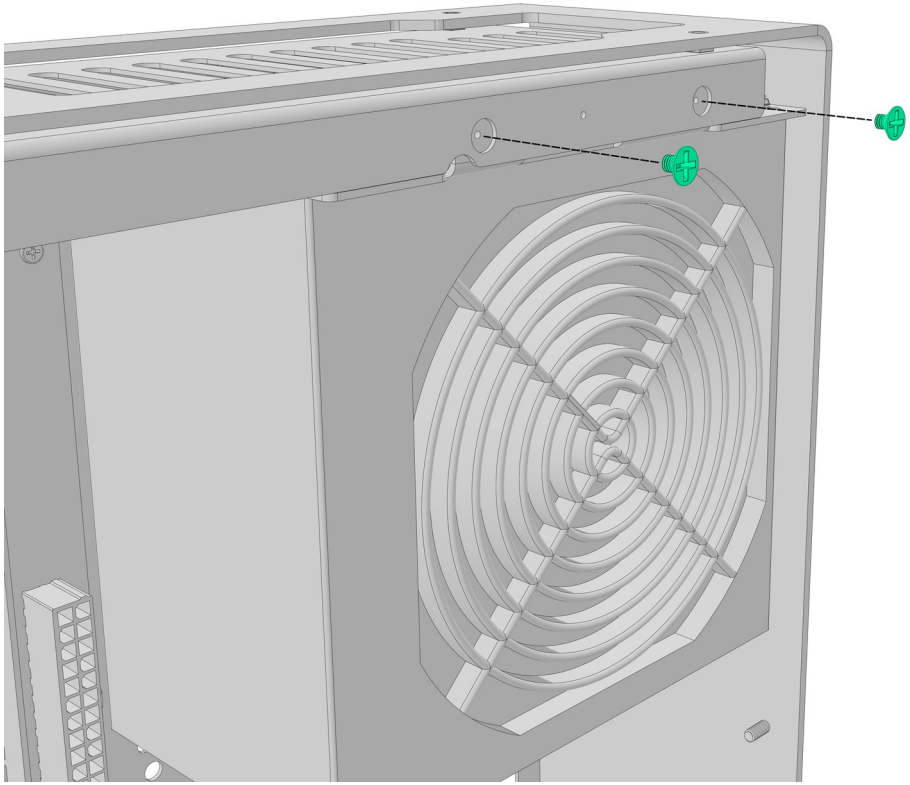

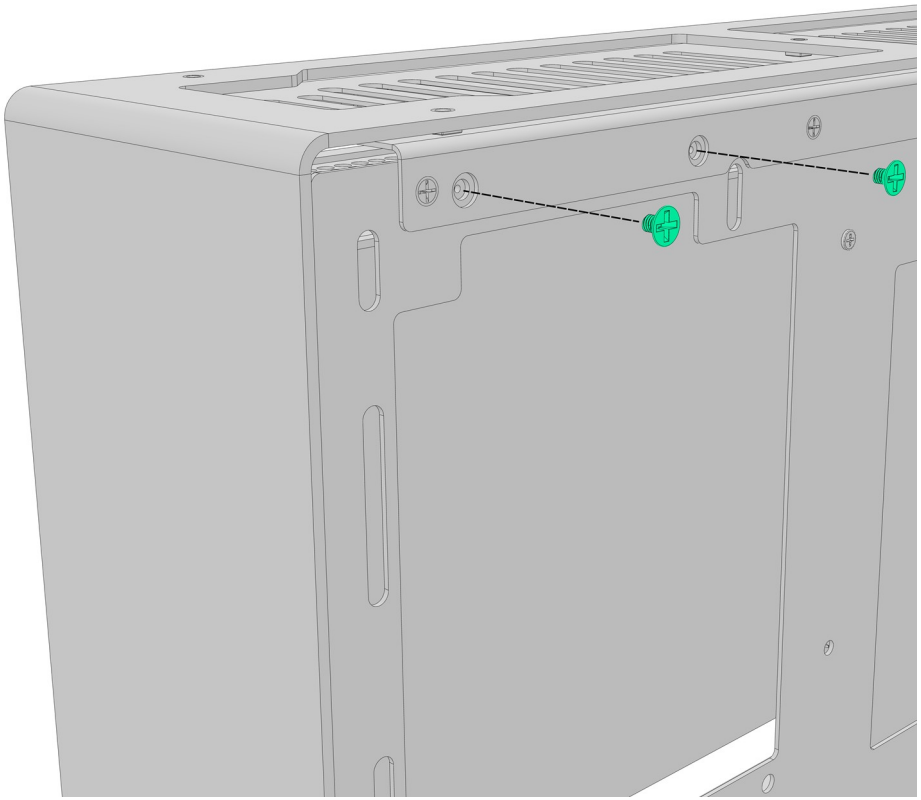

18. Installing hard drives – rear 3.5” HDD

- if you are using a long 3 slot GPU, you can install one 3.5” hard drive directly on the motherboard tray
- align the drive and screw it to the case using three provided silver-colored bolts

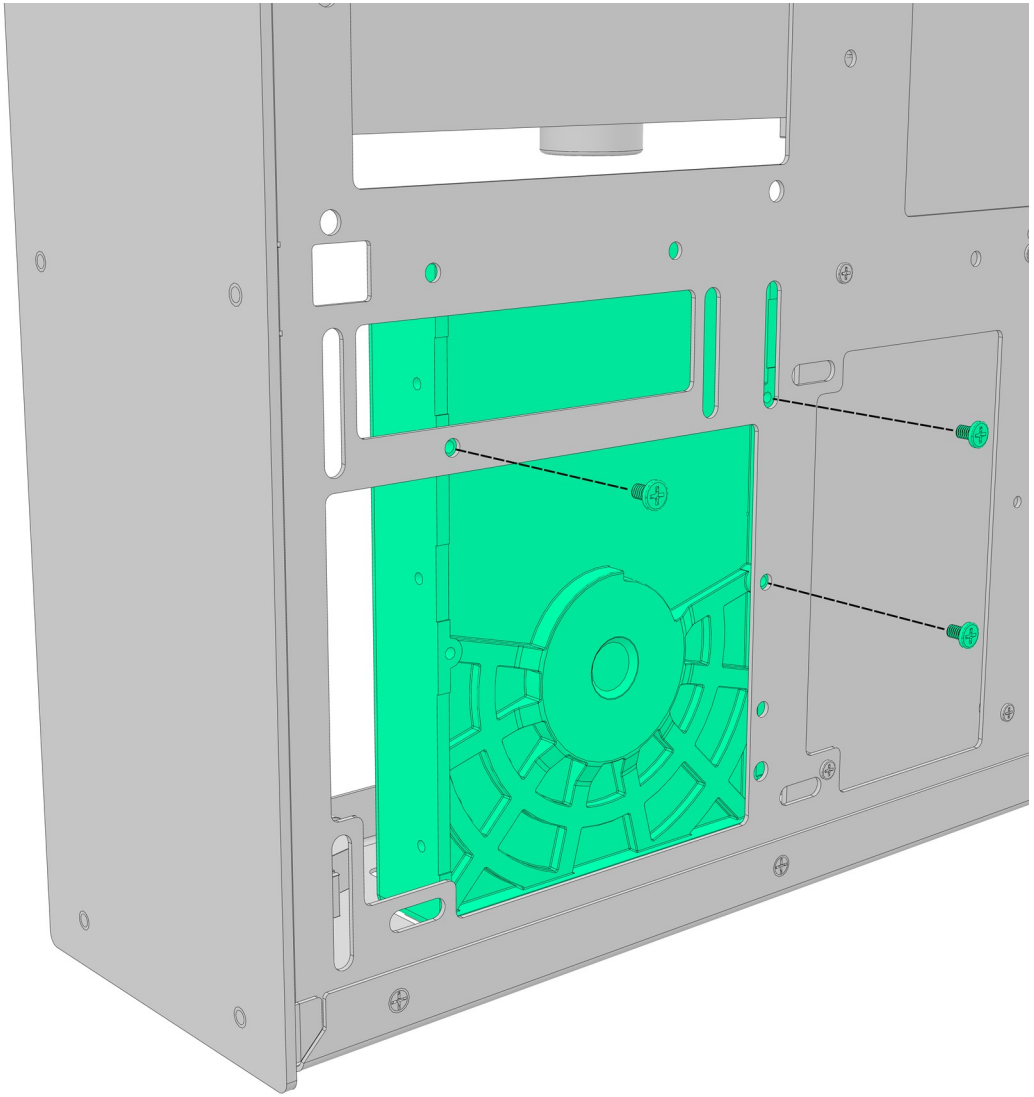

#6-32

PH2

5mm

19. Installing hard drives – HDD bracket

- screw down your 3.5” or 2.5” drives to the HDD bracket using provided screws like shown in the picture
- you only need to screw down 2.5” drives on one side
- install **additional HDD side bracket** if using 3.5” drives
- for 3.5” drives use larger, silver-colored screws
- for 2.5” drives use smaller, black screws
- **install the HDD bracket even if you are not using any hard drives or SSD’s,** as it provides support for the left side panel

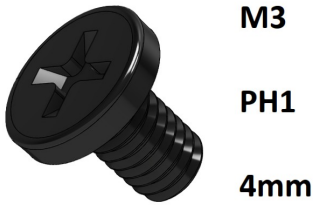

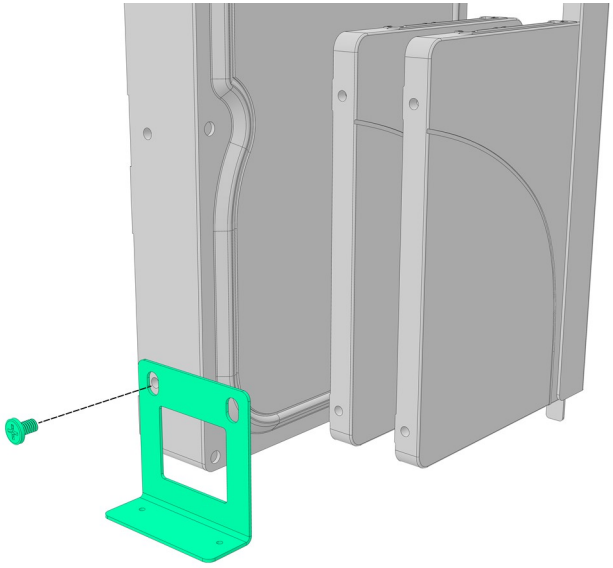

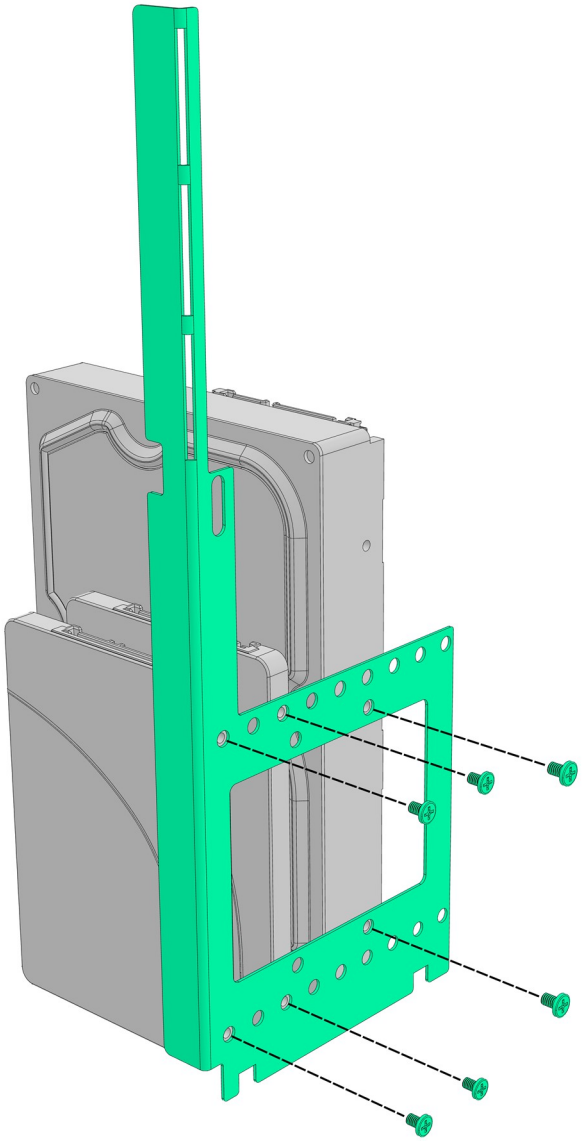

20. Installing hard drives – washer

- before installing the HDD bracket into the case, **put the washer** on the stud like shown on picture
- this is the washer you removed in step 4

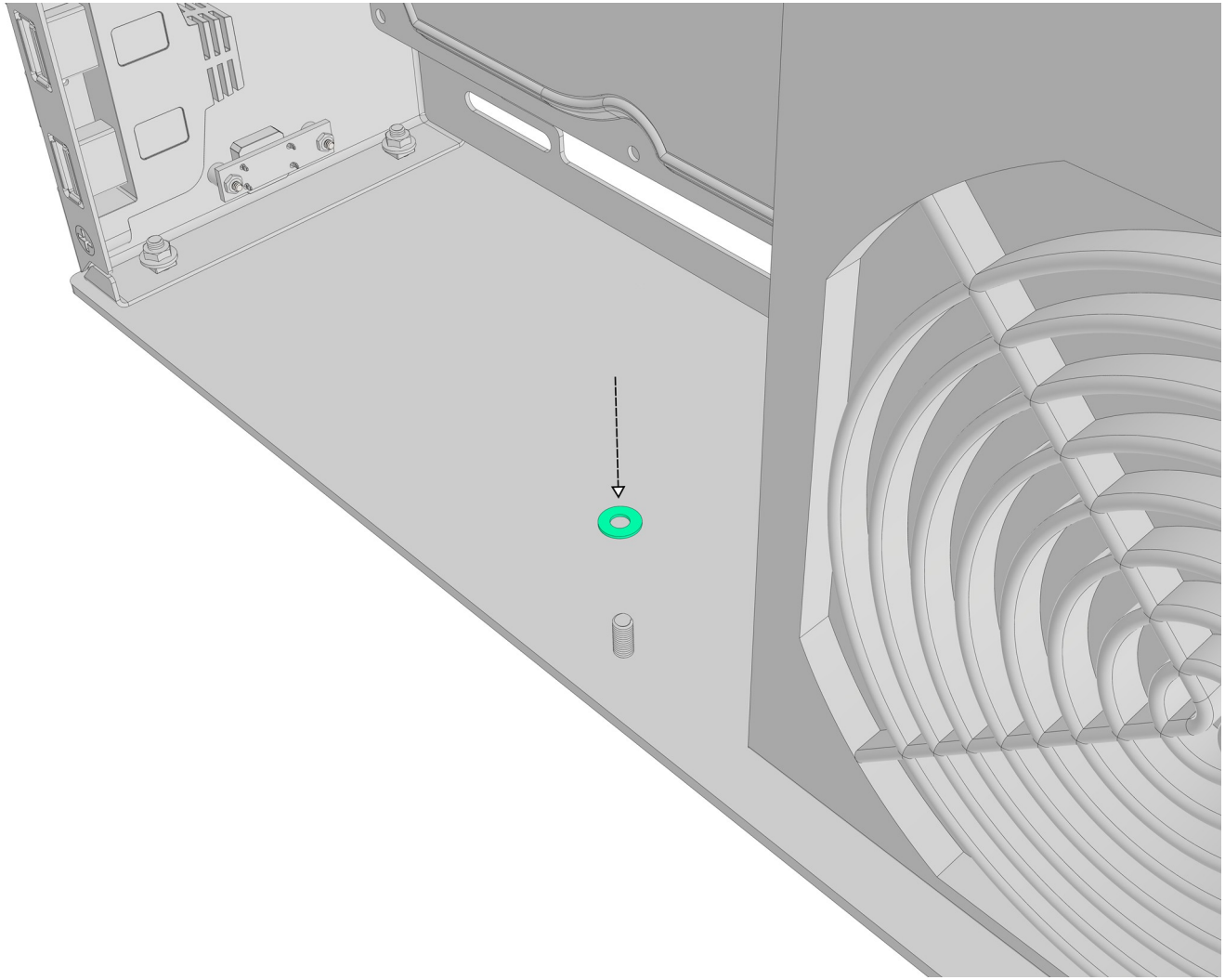

M3

0.8mm

21. Installing hard drives – installing the assembly

- put the HDD bracket with hard drives into the case like shown in the picture
- slide the assembly towards the bottom of the case **making sure that both HDD bracket's tabs sit under the flanged nuts on the case**

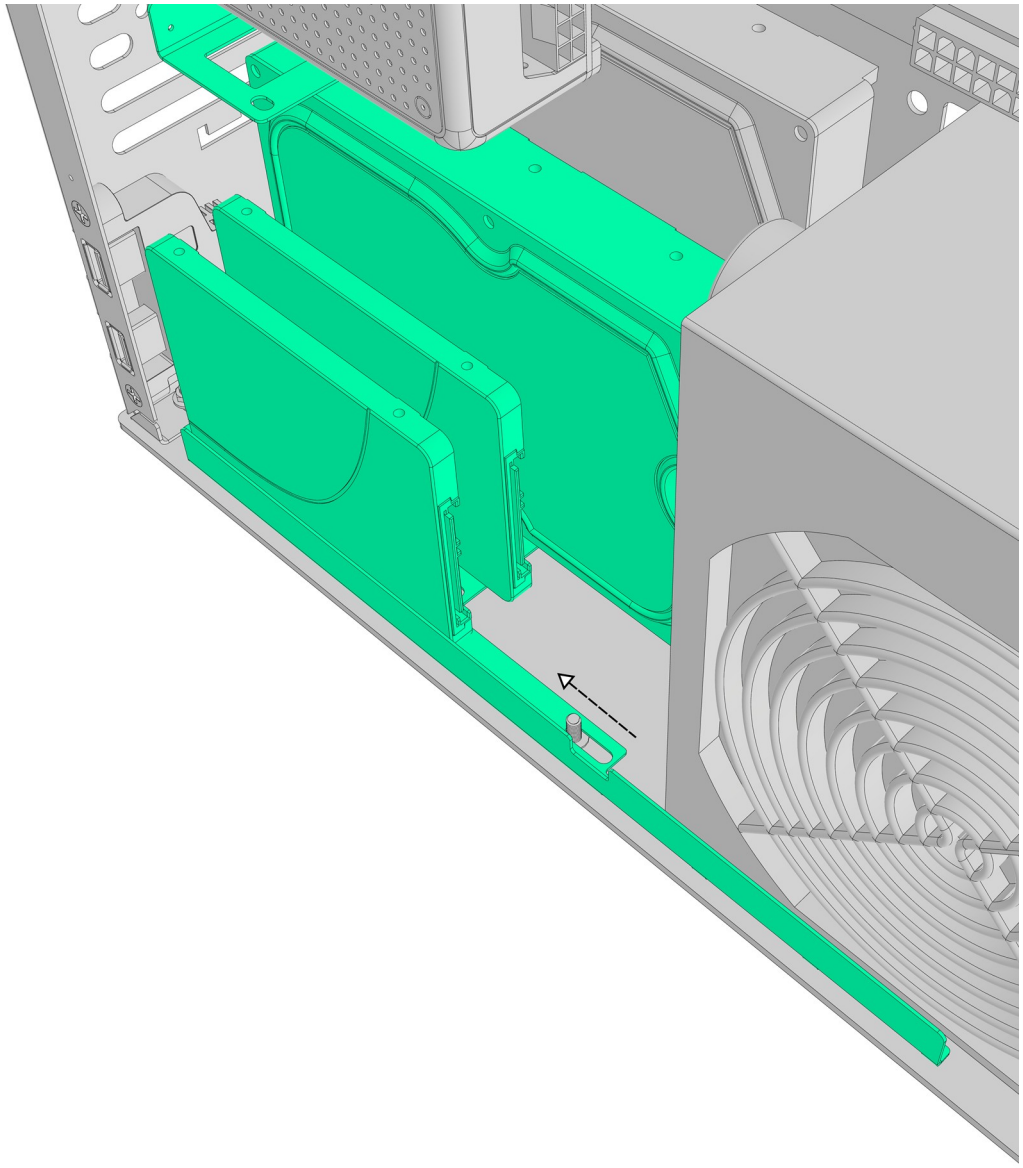

22. Installing hard drives – nut

- secure the HDD bracket using the nut you removed in step 3
- you can use provided tool or 5.5 mm socket
- if using 3.5” hard drives also secure the HDD side bracket to the case from the bottom with two bolts

M3

PH1

4mm

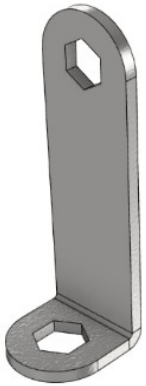

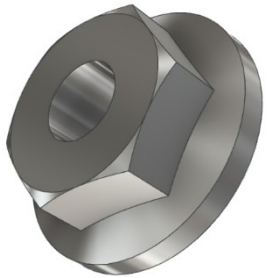

M3

5.5mm socket

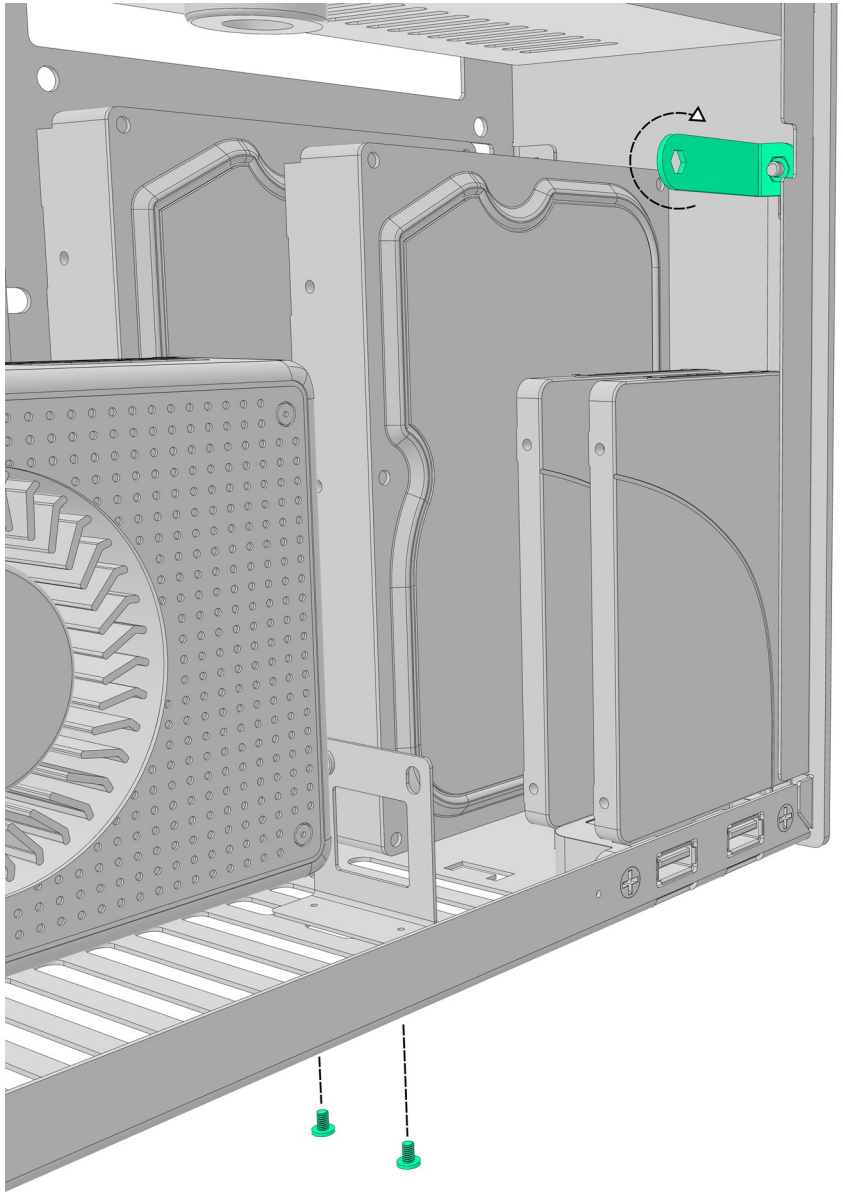

23. Parts installed

- after installing all the main components, you can attach other cables such as PSU or SATA
- you can now proceed to install side panels and the stand
- installation of water-cooling radiators and alternative layouts are covered in the later part of the manual

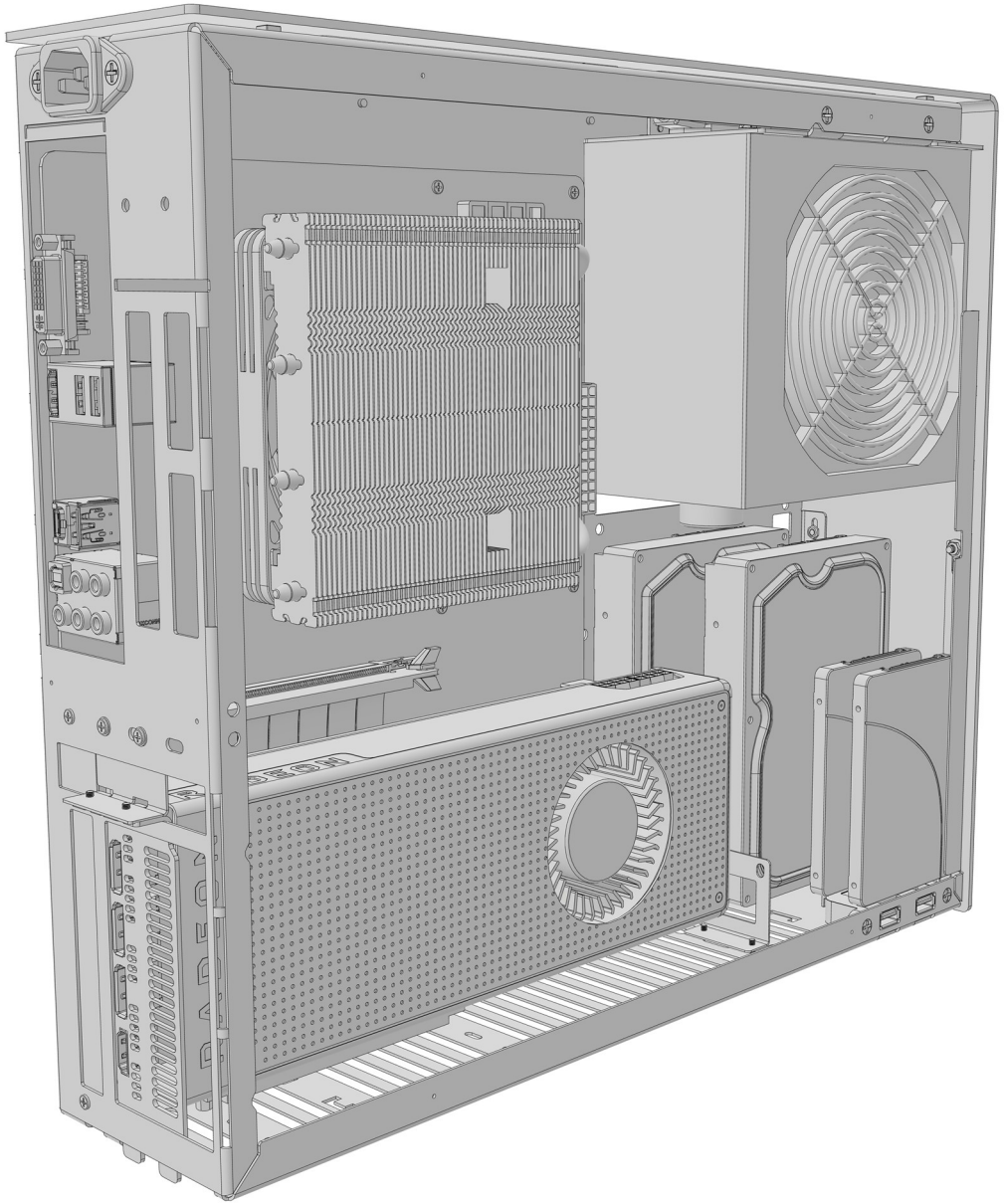

24. Installing side panels – left panel

- install the left side panel following instructions from step 2, but in reverse order
- secure the panel using two or three bolts (bolt on the bottom side, towards the rear of the case, is recommended if you are traveling with the case)

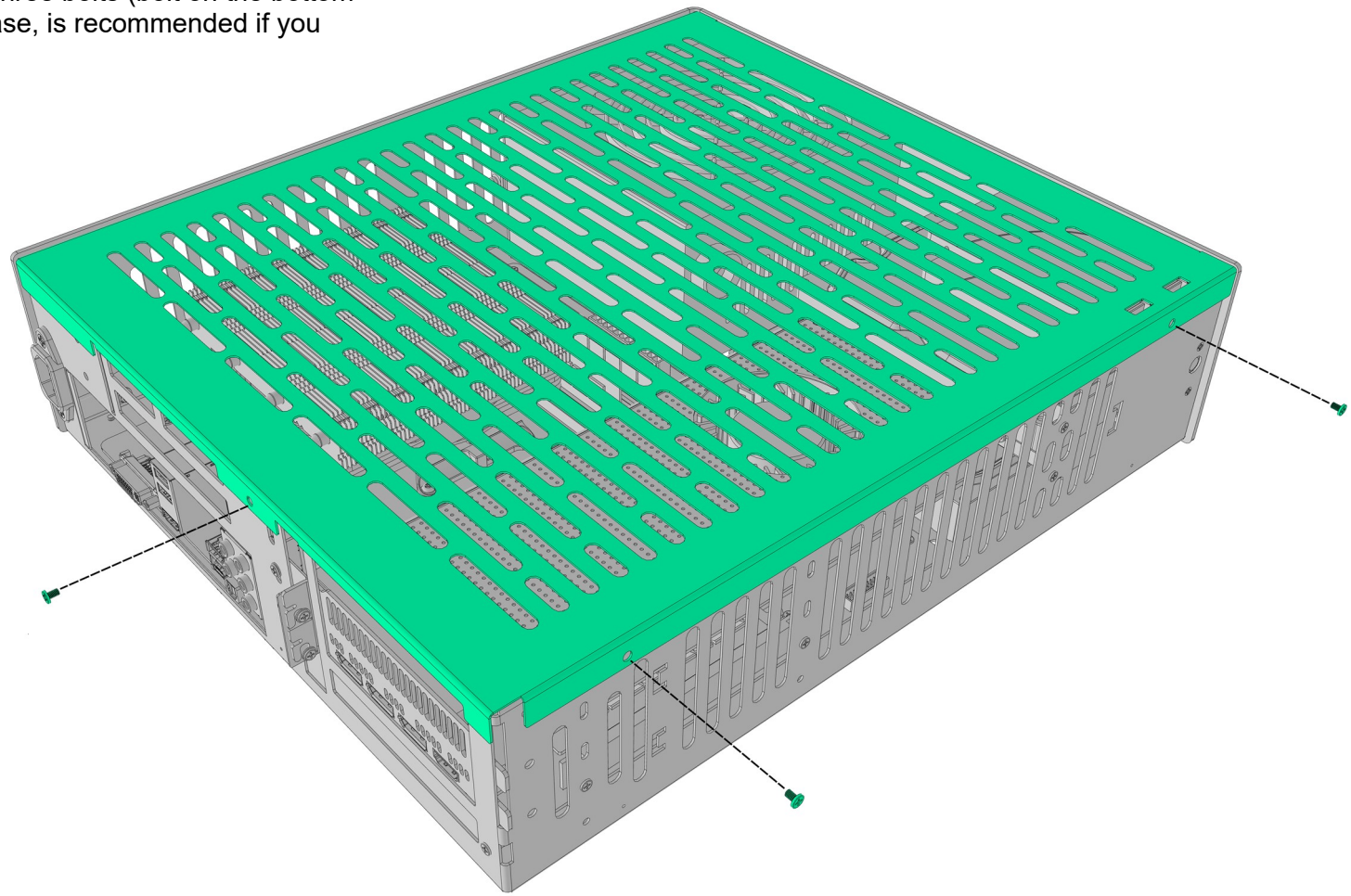

M3

PH1

4mm

25. Installing side panels – right panel

- install the right side panel following instructions from step 2, but in reverse order
- secure the panel using two or three bolts (bolt on the bottom, towards rear of the case, is recommended if you are traveling with the case)

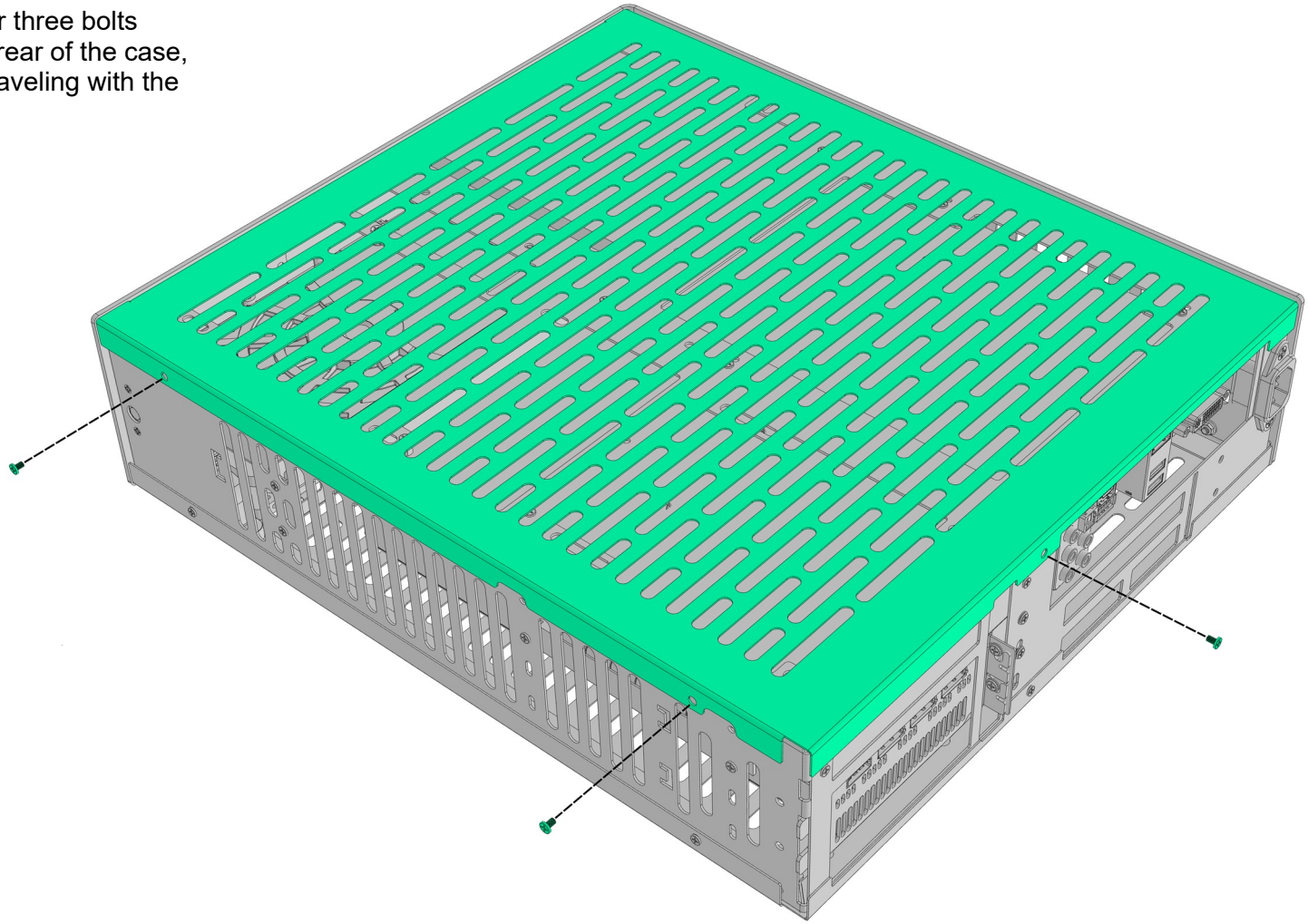

M3

PH1

4mm

26. Installing the stand – rear slots

- lay the case on its **top** side
- align the slots on the stand to the tabs on the bottom of the case like shown in the picture
- push the stand towards the front of the case

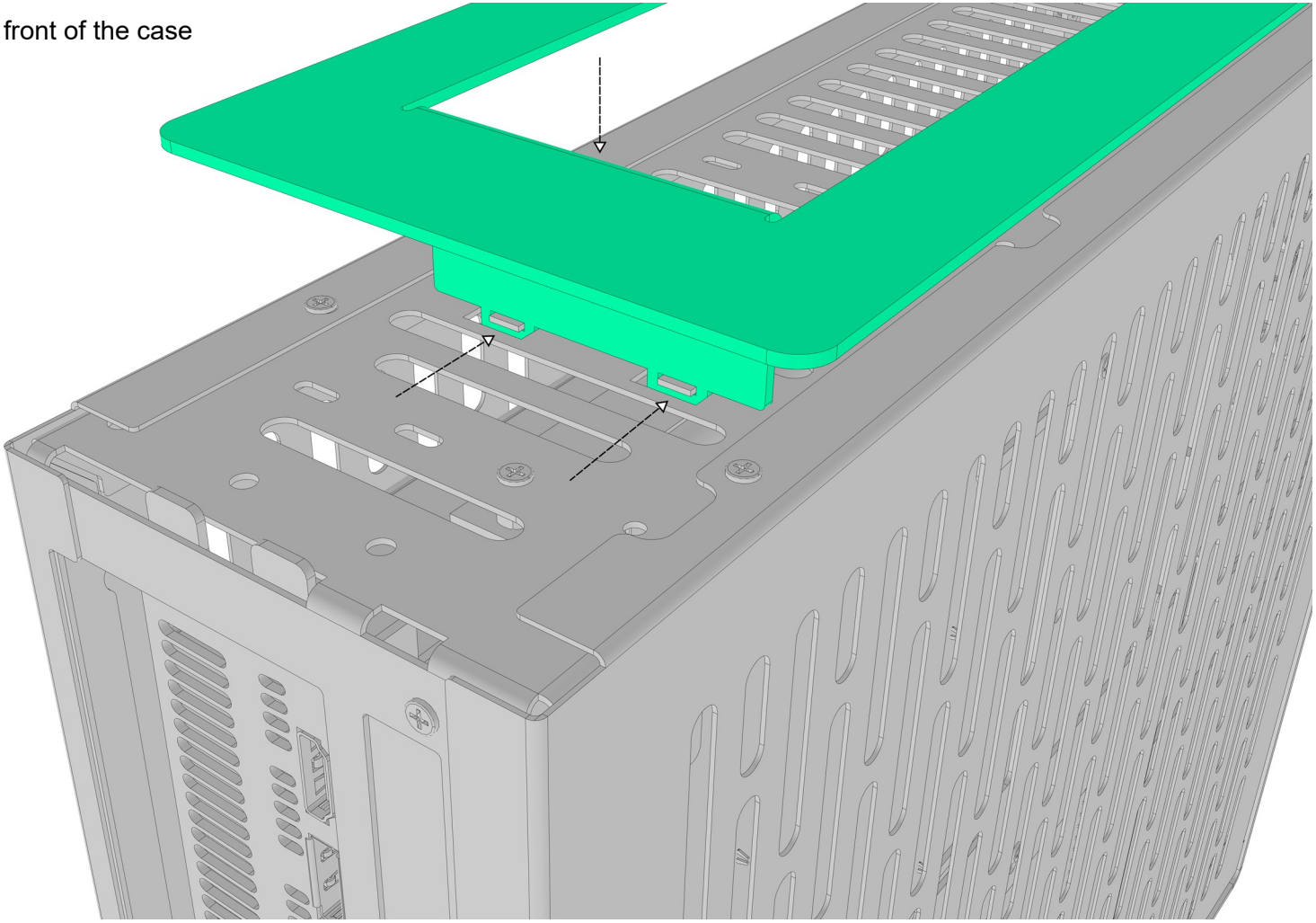

27. Installing the stand – front slot

- align the slot on the stand to the tab on the bottom side of the case
- **bend the stand** by a few mm towards the front side of the case, and while it's bent like that **push it down** towards the bottom of the case and release the pressure
- stand should **contract** and get secured to the case
- to remove the stand, repeat these instructions in reverse order

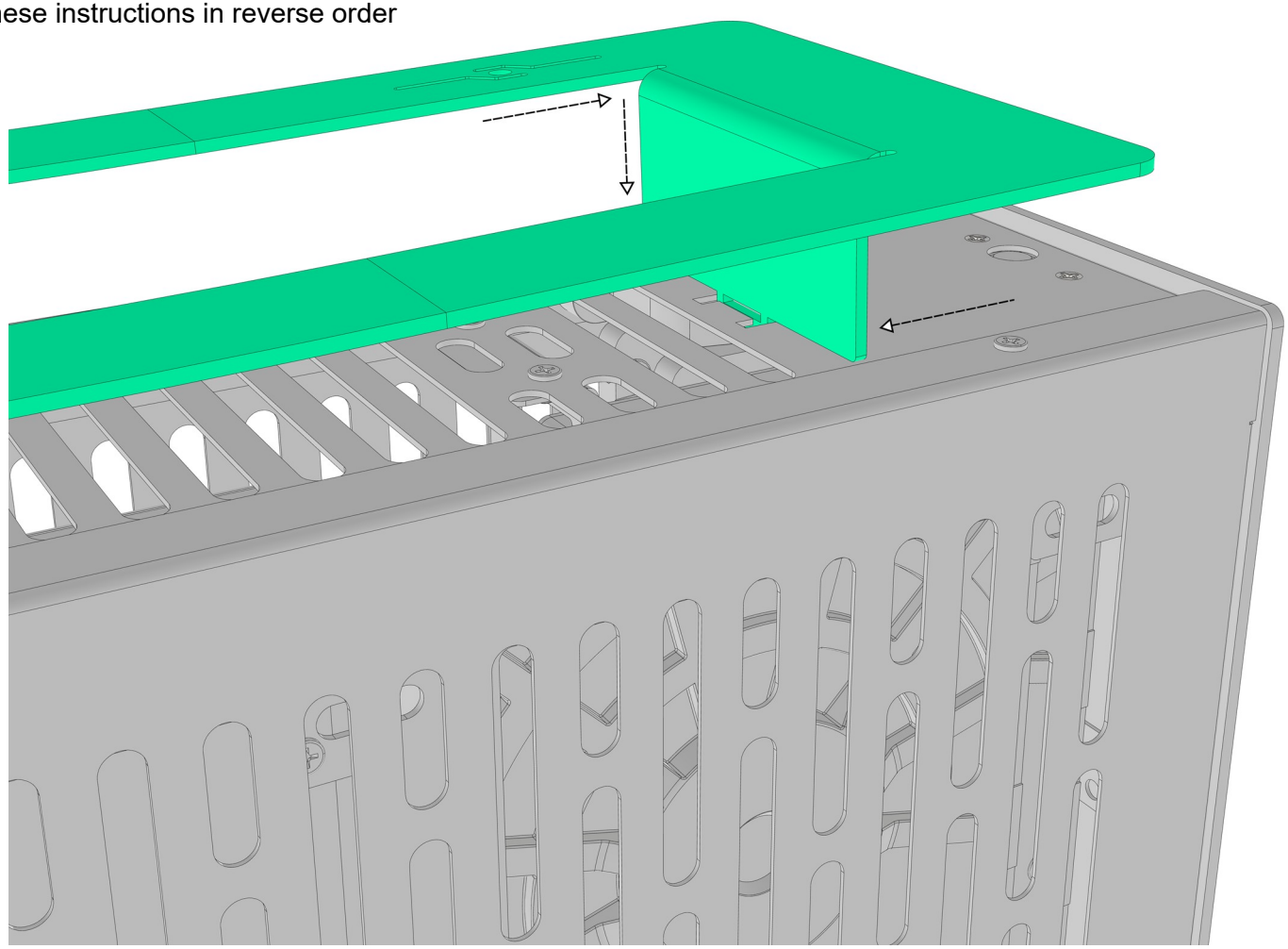

28. Build complete

- congratulations, you have completed your build in the N-ATX case!
- if you have any questions, comments or want to send us your feedback, please write to us at info@sfftime.com
- be sure to check out our website sfftime.com for updates and new case designs
- you can find instructions for mounting water-cooling radiators and alternative layouts on the following pages
- want to share pictures of your build with us? Send them to the email above and we'll display them on our website and social media

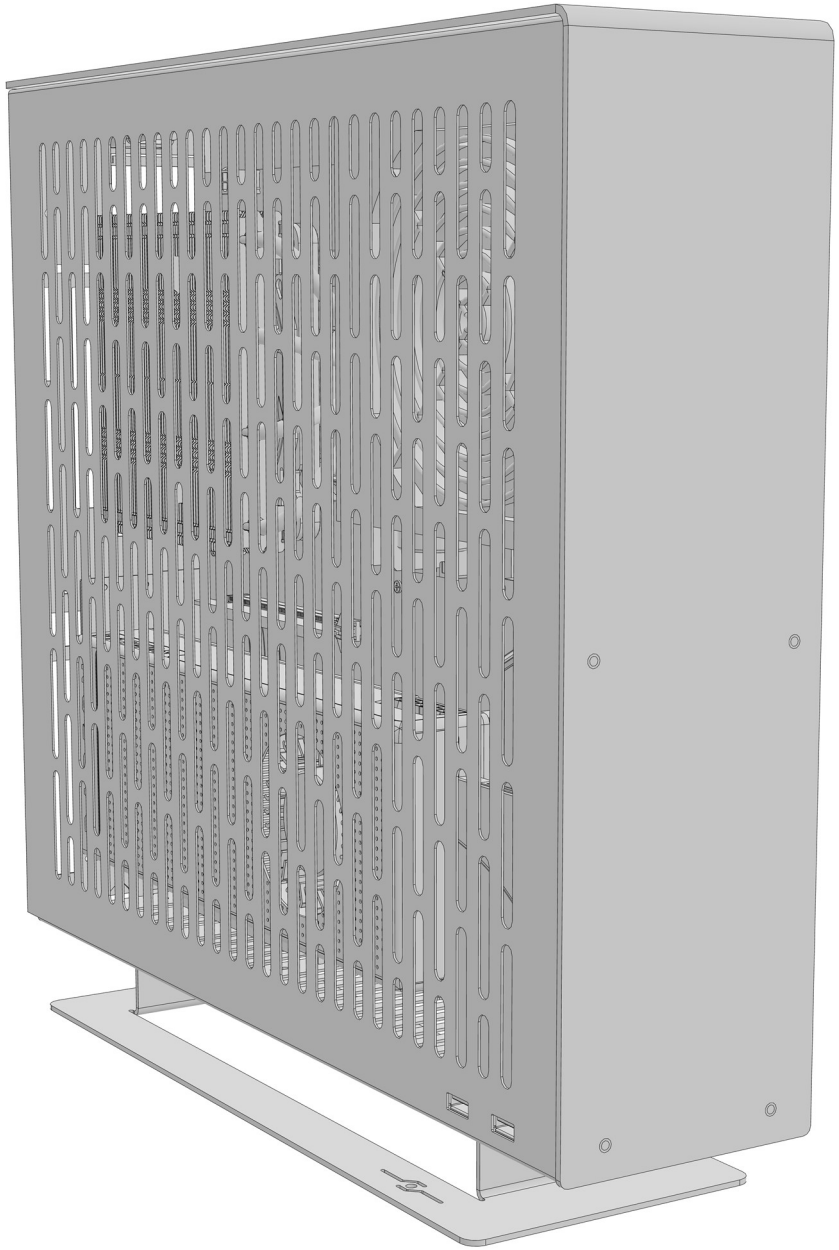

29. Installing the water-cooling radiator – 120 mm radiator

- optionally, you can install water-cooling radiator in the position otherwise occupied by hard drives
- place the radiator in the position shown in the picture, and screw it to the case using three provided bolts
- depending on the threads on your radiator, use either provided M3 or #6-32 bolts
- you can mount a 140 mm radiator in the same fashion

M3

PH1

4mm

#6-32

PH2

5mm

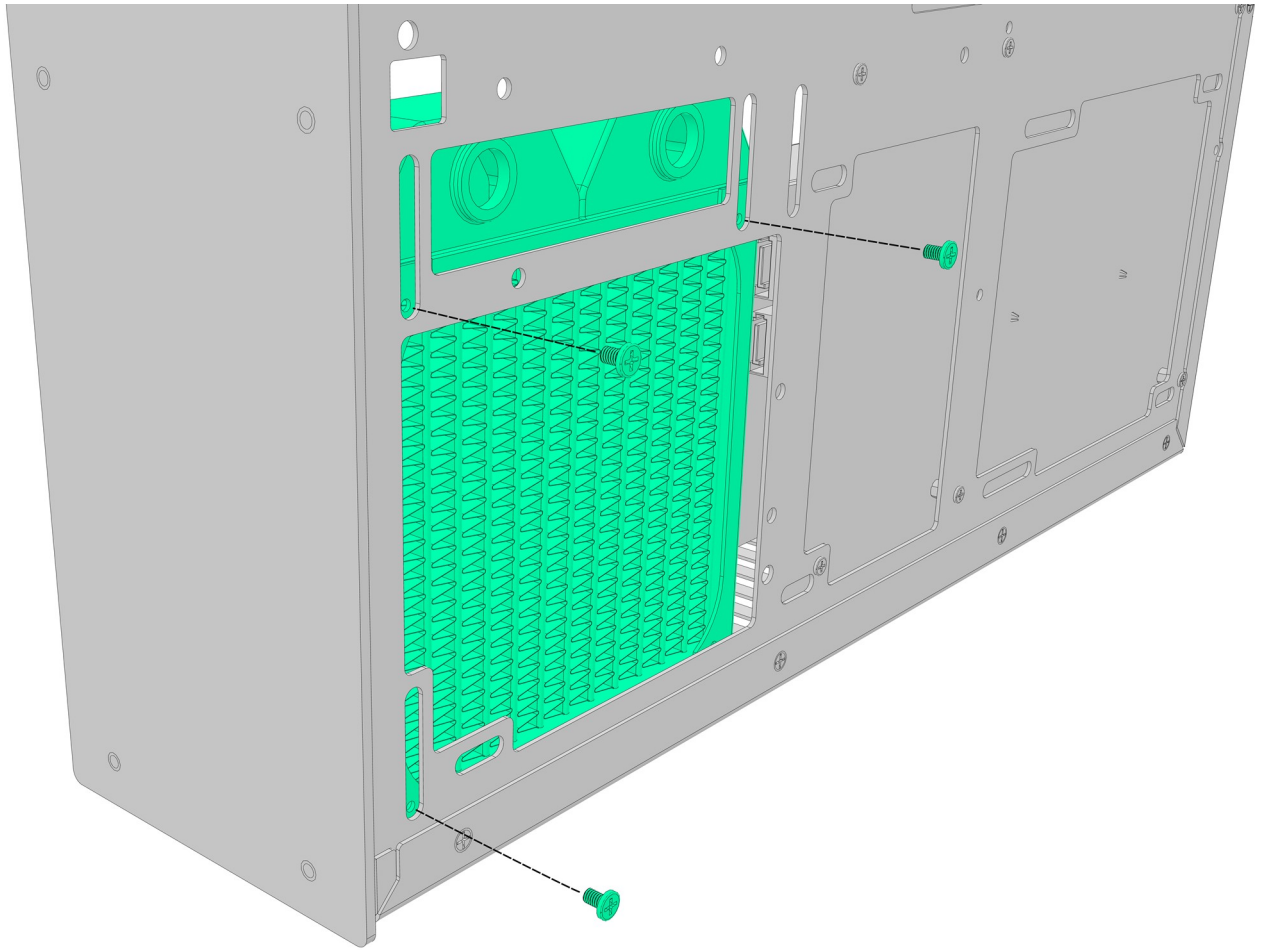

30. Installing the water-cooling radiator – 360 mm radiator (part 1)

- place the radiator in the position shown in the picture, and screw it to the case using seven provided bolts
- depending on the threads on your radiator, use either provided M3 or #6-32 bolts
- you can also mount the radiator in front of the fans for pull configuration. In that case you will need to use longer bolts with **countersunk** head
- you can mount a 240 mm radiator in the same fashion

M3

PH1

4mm

#6-32

PH2

5mm

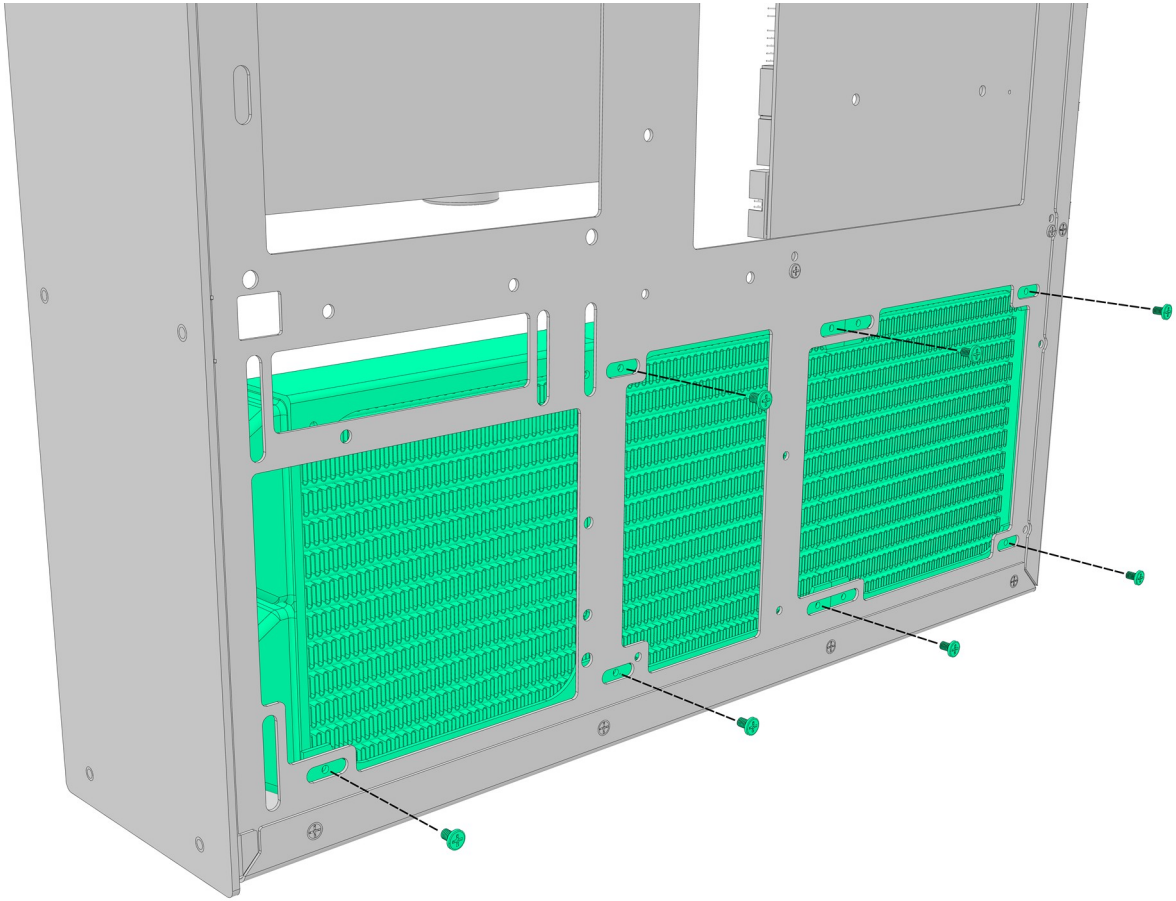

31. Installing the water-cooling radiator – 360 mm radiator (part 2)

- picture on the right shows one of possible configurations with 360 mm radiator
- if using 2 slot GPU and up to 30mm thick radiator, you will have to use 15 mm fans instead of 25 mm ones used with single slot GPU
- fan grill is recommended on the leftmost fan with push configuration for riser cable protection

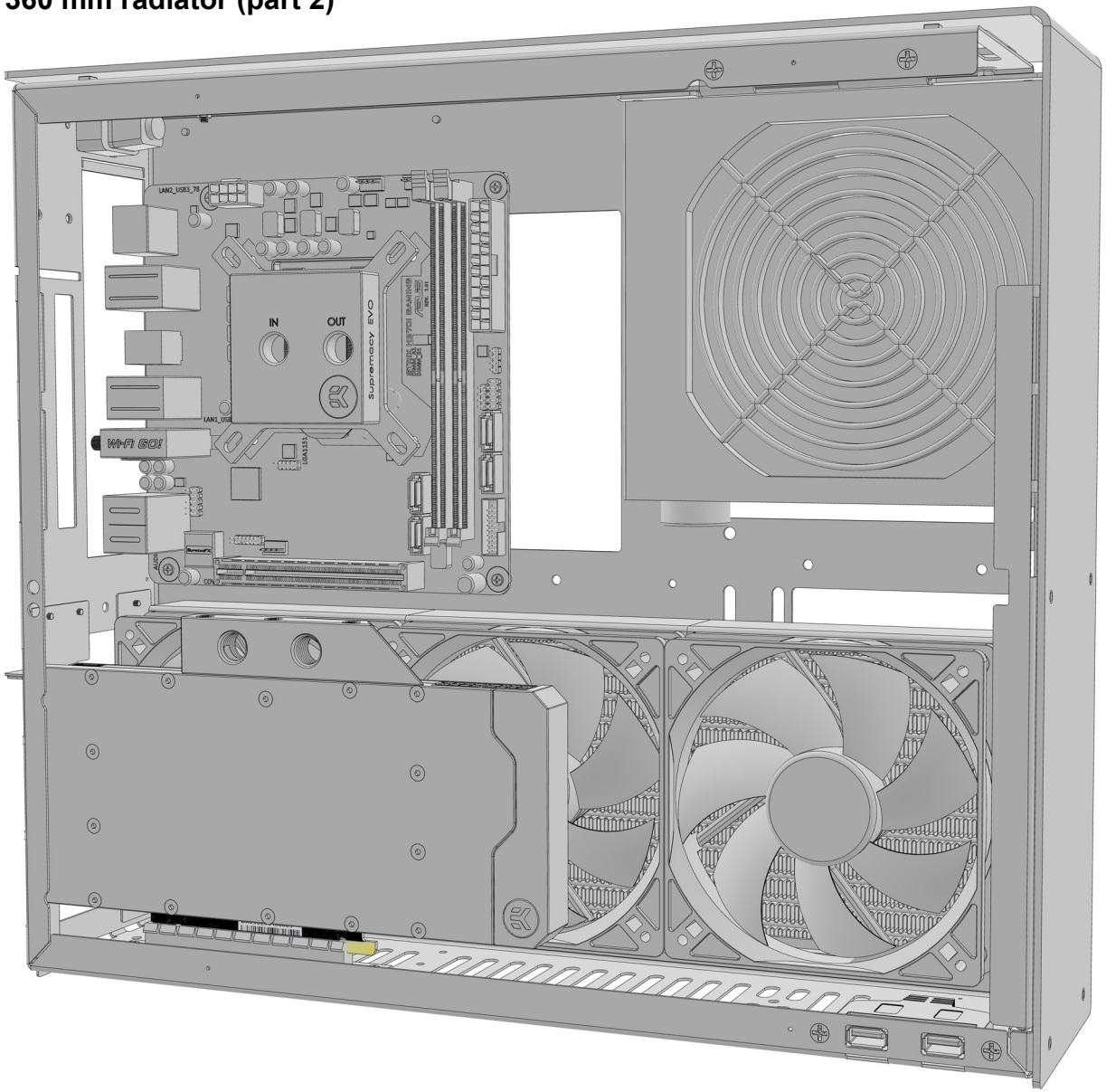

32. Alternative GPU mount – motherboard standoff (part 1)

- this case allows mounting the GPU in upper position with optional accessory kit that includes alternative mounting brackets for GPU and PSU, shorter riser cable and mounting hardware
- this allows for a few alternative water-cooling layouts depending on your hardware configuration
- please note that placing 2 slot GPU in upper position severely limits the CPU block clearance and for that reason we only recommend this configuration for single slot water-cooled GPUs
- to mount the GPU in upper position, start by removing one motherboard bolt indicated in the picture

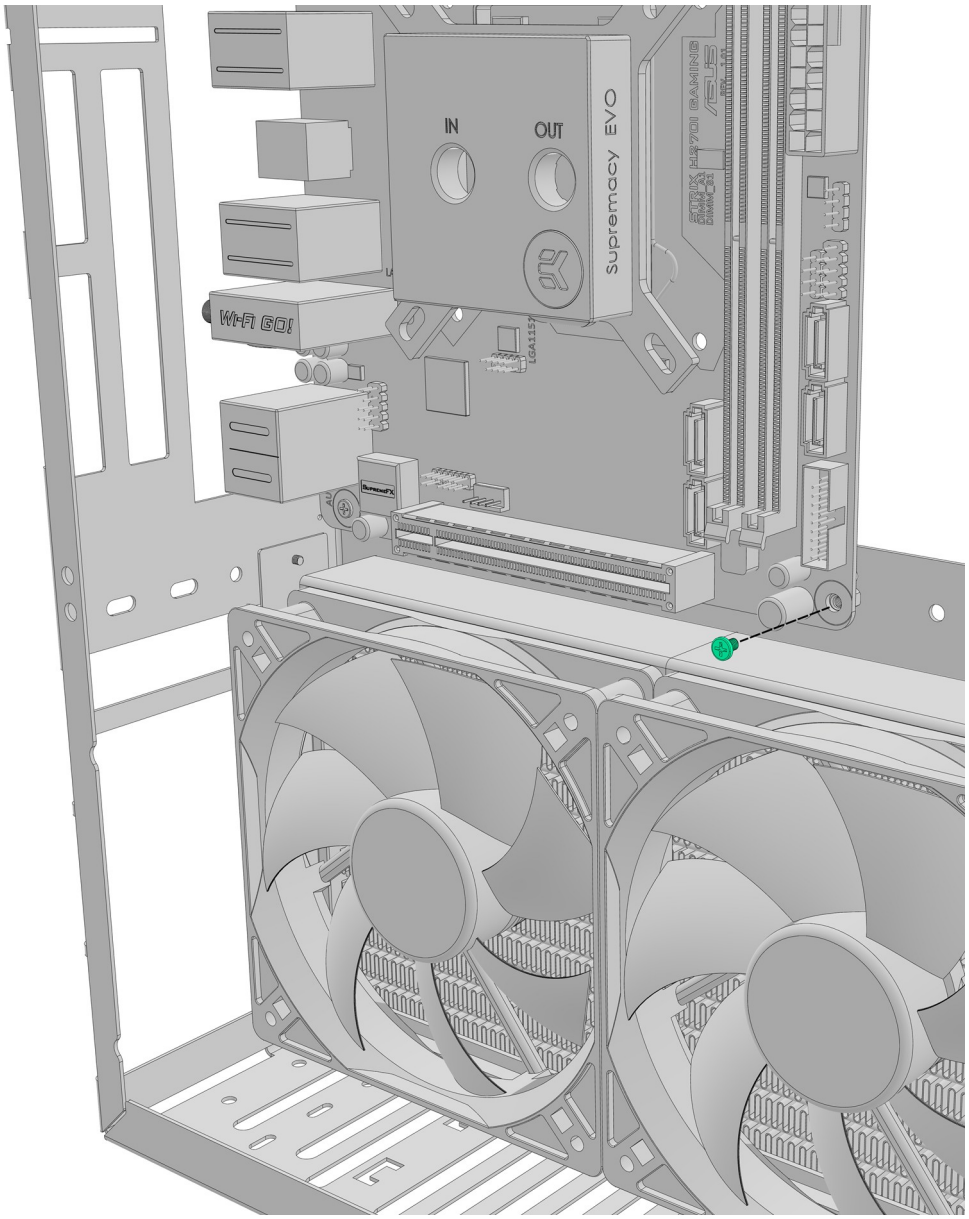

33. Alternative GPU mount – motherboard standoff (part 2)

- install the 40 mm long standoff found in the kit using provided tool, do not overtighten

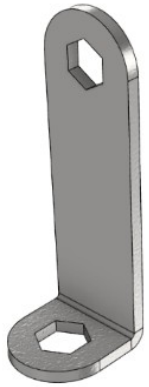

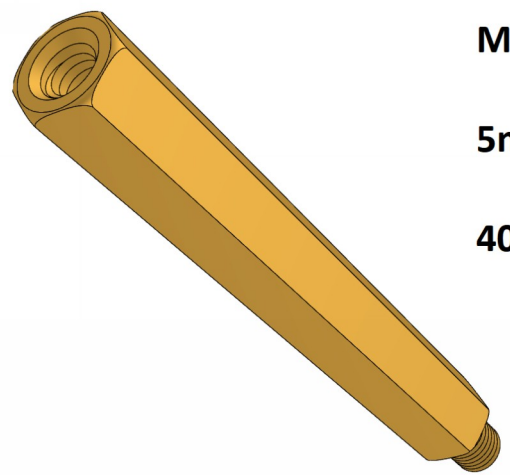

M3

5mm socket

40mm

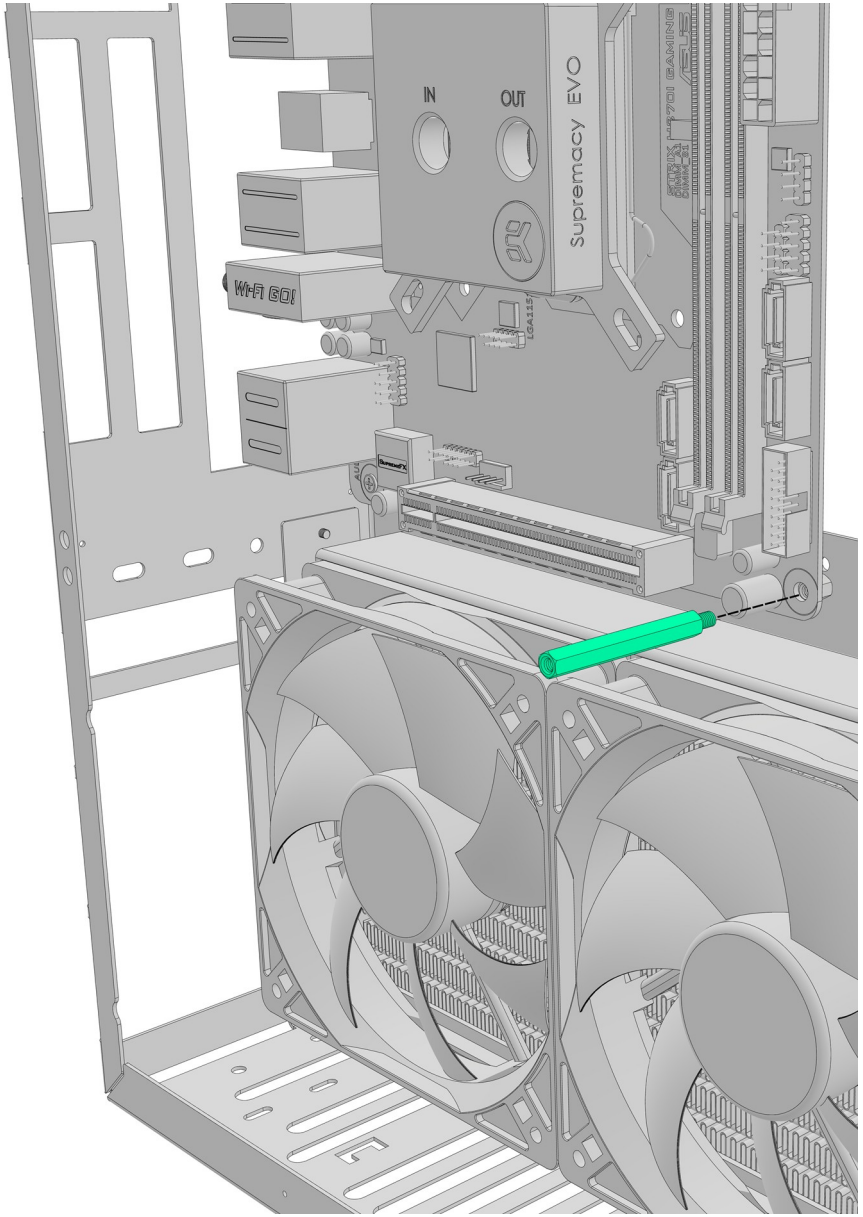

34. Alternative GPU mount – preparing the GPU

- assemble the GPU, riser and upper GPU mounting bracket found in the kit like shown in the picture
- for mounting the riser to the upper GPU bracket follow instructions from step 9
- **do not screw** down the GPU bracket yet

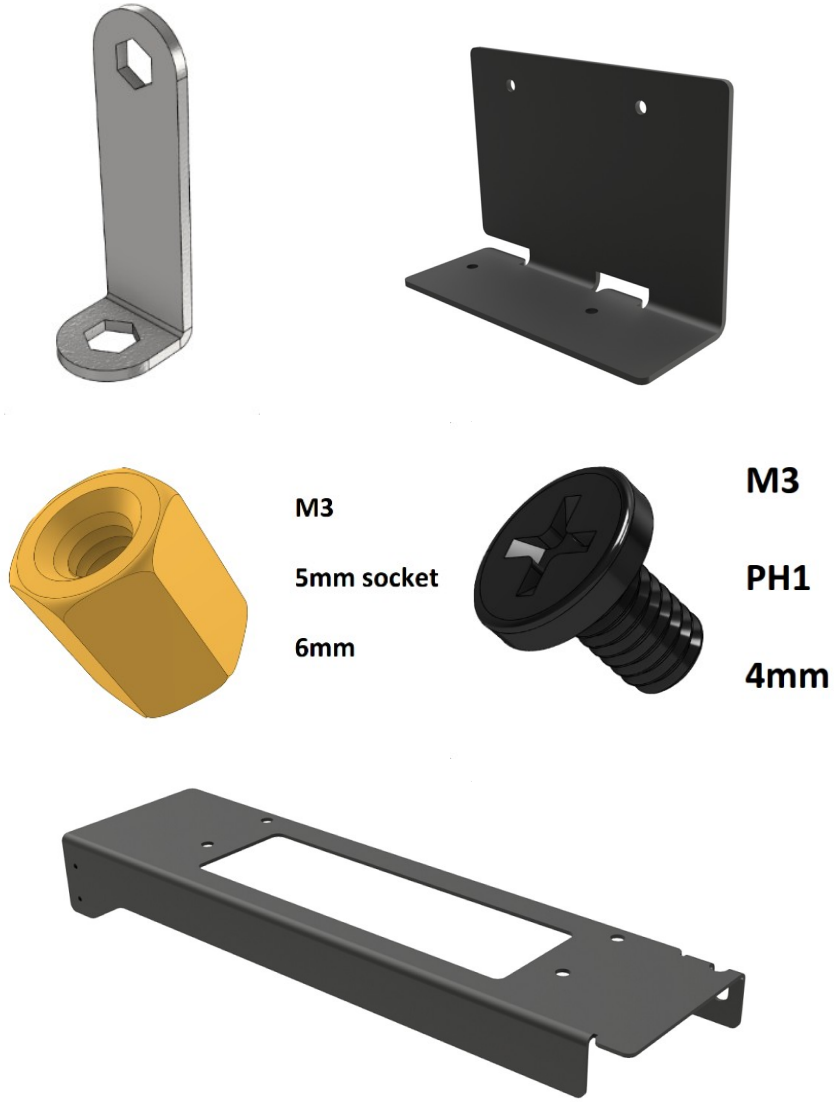

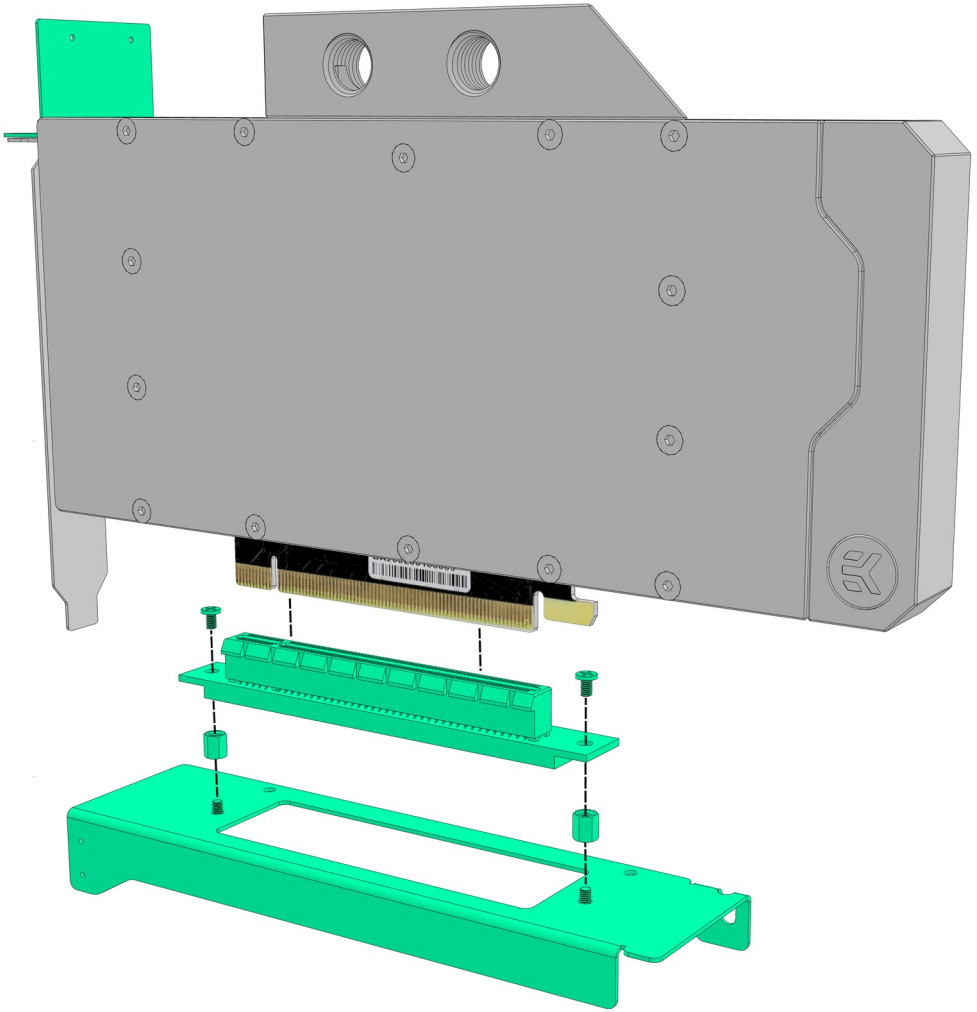

35. Alternative GPU mount – installing the assembly (part 1)

- insert the assembly from the previous step into the case
- line it up so that the GPU's PCI bracket enters the narrow slit on the back side of the case

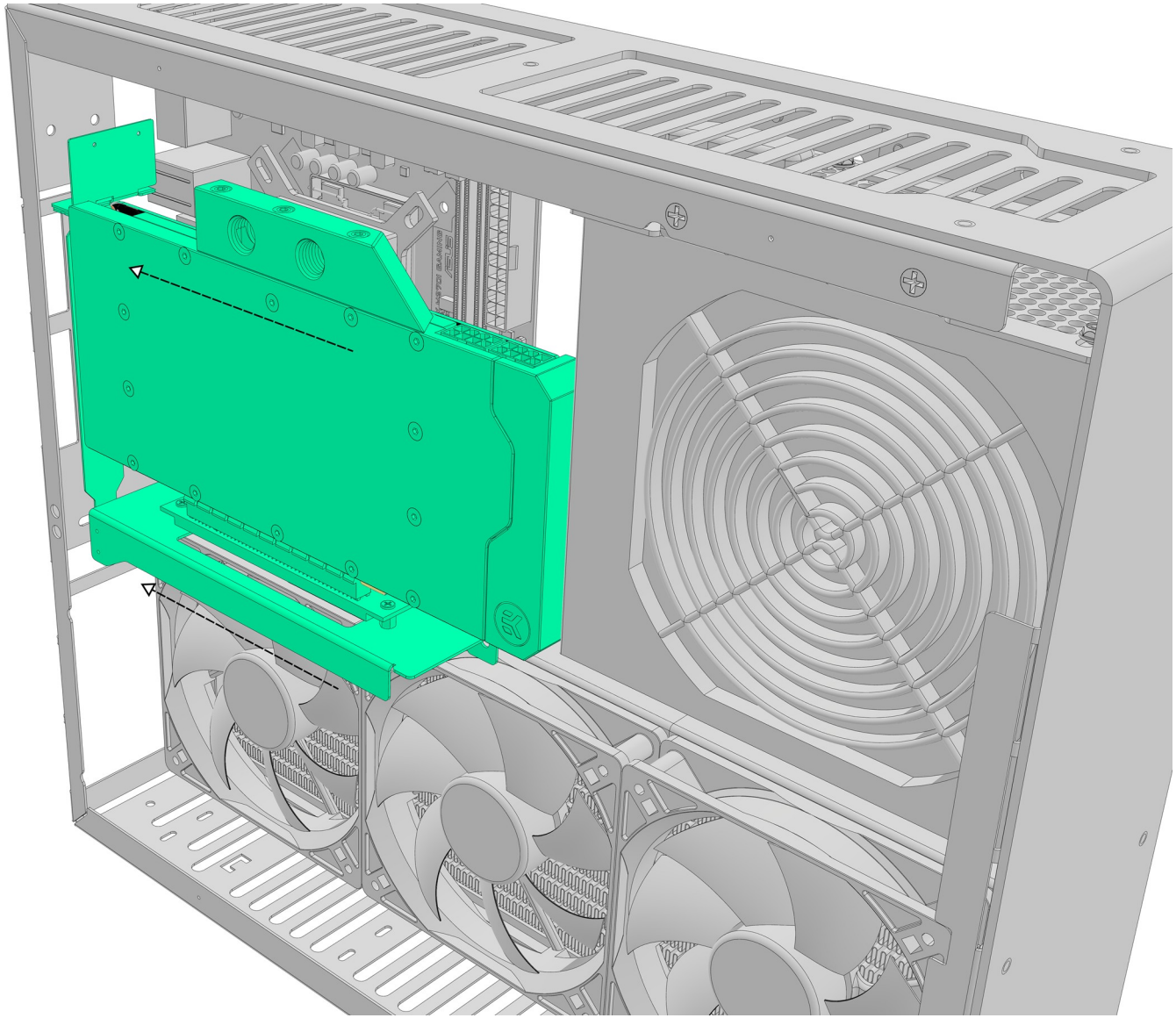

36. Alternative GPU mount – installing the assembly (part 2)

- screw down the upper GPU bracket to the case and the motherboard standoff like shown on picture
- use **countersunk** bolts to attach the upper GPU bracket to the chassis, and use flat head bolt to attach the bracket to the motherboard standoff
- you can now **screw down the GPU bracket** following instructions from step 12
- plug the male end of the riser cable into the motherboard

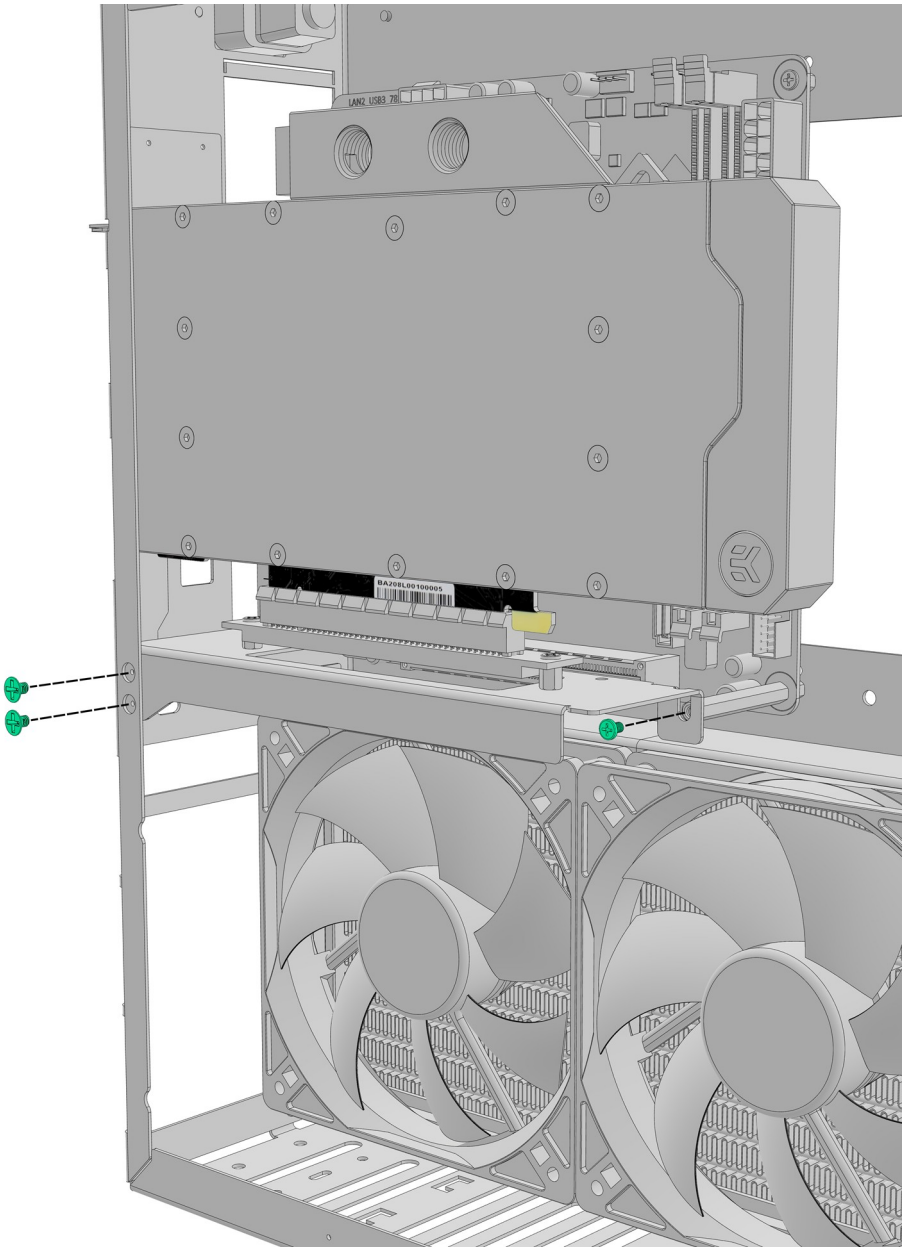

37. Alternative GPU mount – installing the assembly (part 3)

- **put a washer under the bolt** that holds the GPU bracket
- screw down the GPU bracket to the case with two bolts

M3

0.5mm

M3

PH1

4mm

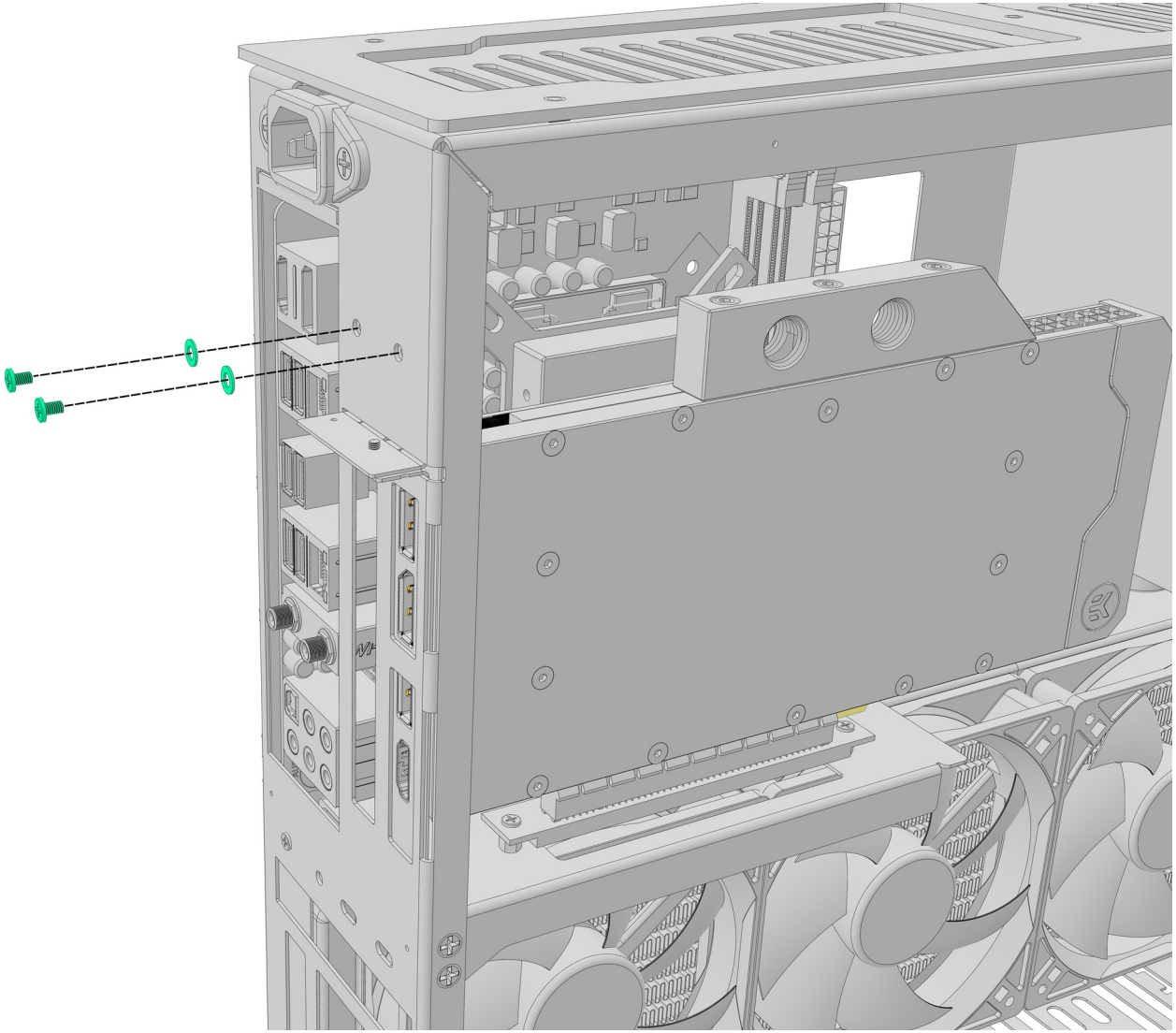

38. Alternative PSU mount – PSU bracket

- for configurations that require ATX motherboard with water-cooling radiator larger than 140 mm it is possible to side mount 240 or 280 mm radiator
- this configuration requires mounting GPU to the upper position and SFX power supply in alternative position in front of ATX motherboard
- to mount power supply to that position you need to use alternative PSU bracket provided in the kit
- screw down the PSU to the bracket using three bolts provided with you PSU and **make sure that the bottom of the PSU is around 3 mm higher than the bottom of the bracket**

#6-32

PH2

6 mm

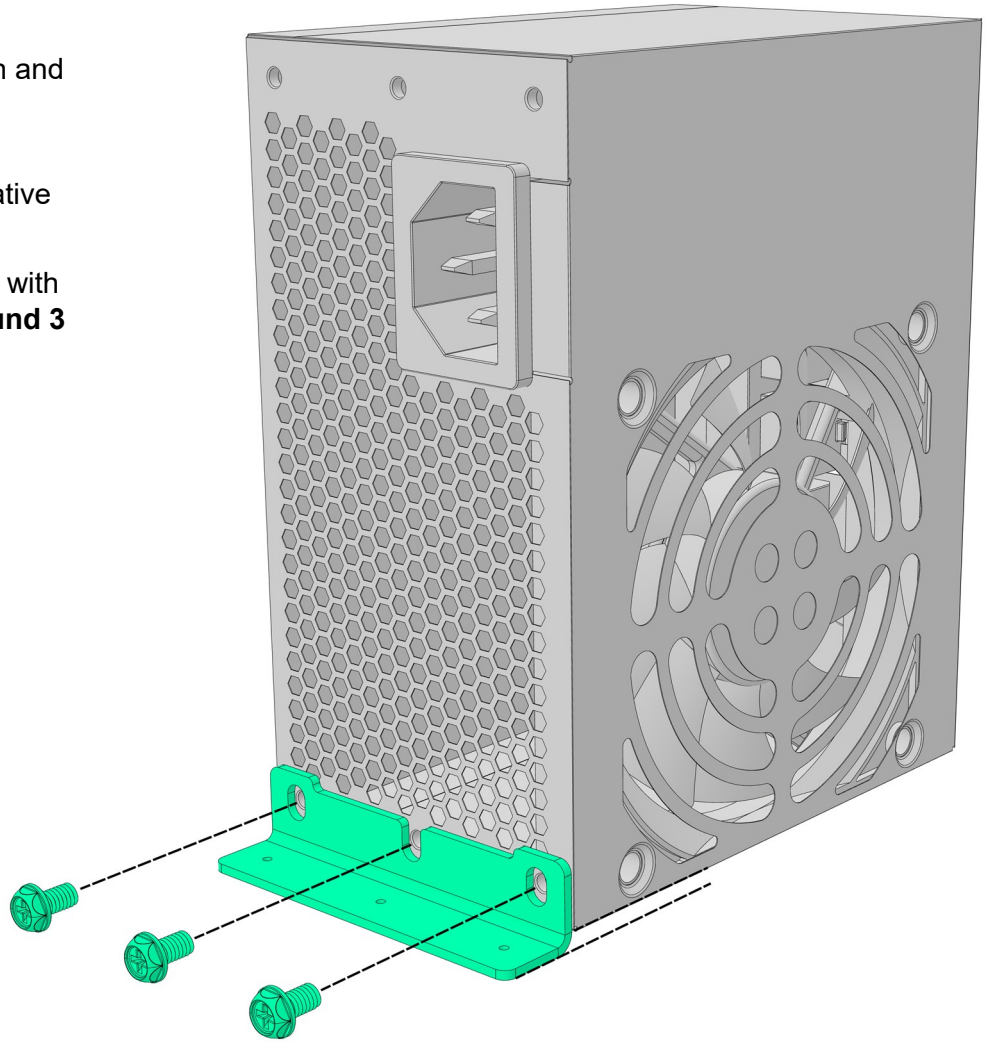

39. Alternative PSU mount – rubber feet

- stick two rubber feet found in the kit to the case like shown in the picture
- they will raise the PSU to allow the clearance for the stand's tabs

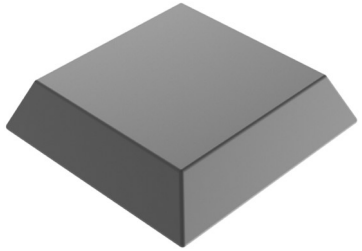

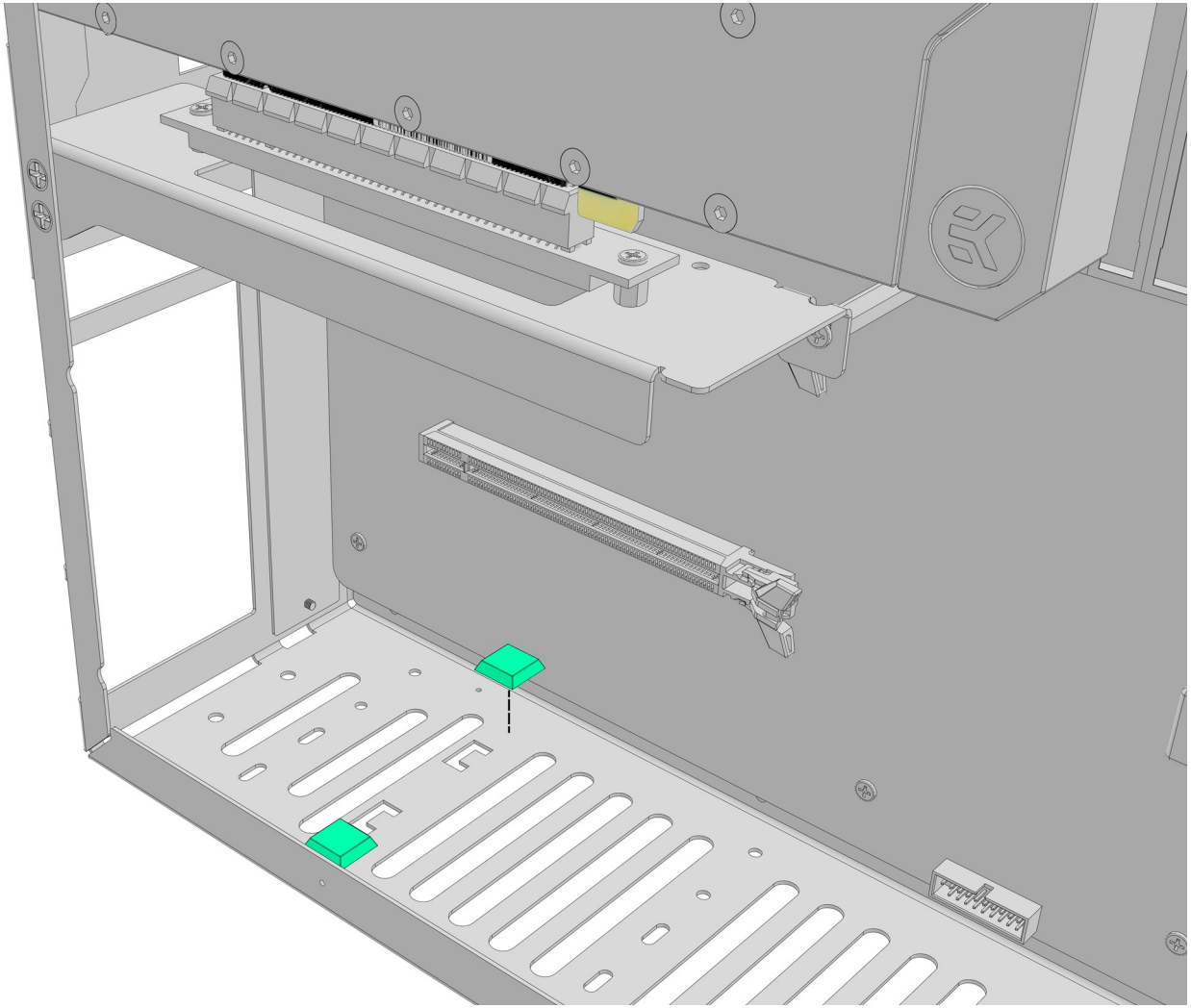

40. Alternative PSU mount – bolts

- place the power supply with the attached bracket in the case like shown in the picture
- screw it to the case using three provided M3 bolts
- please note that this PSU mount option is **not recommended** for transporting the case

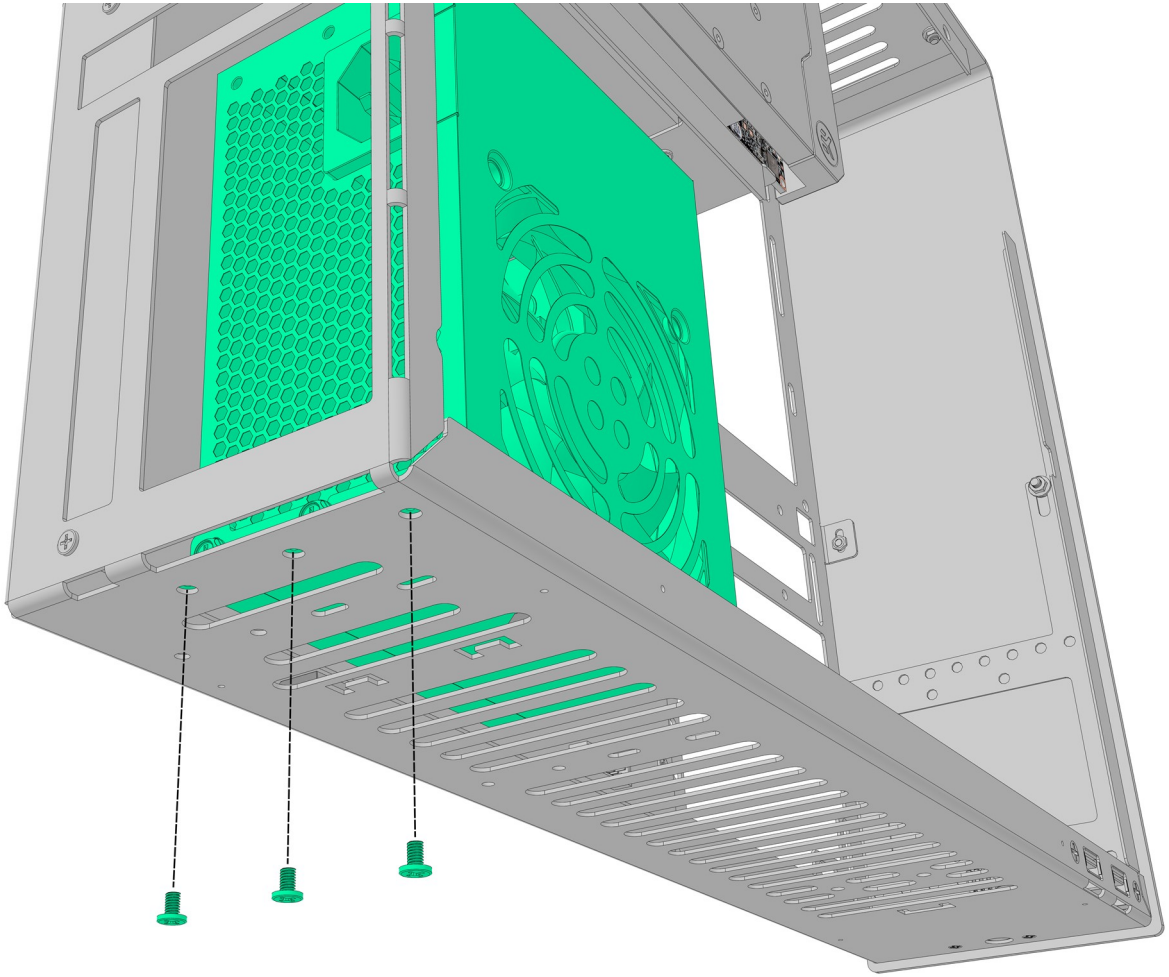

M3

PH1

4mm

41. Side mounted radiator – installation

- place a 240 or 280 mm radiator in the position shown in the picture and screw it to the case using four provided bolts
- depending on the threads on your radiator, use either provided M3 or #6-32 bolts
- **make sure** that you insert 2 mm thick washers provided in the kit between the radiator and the case as they will allow the clearance for the side panel's tab

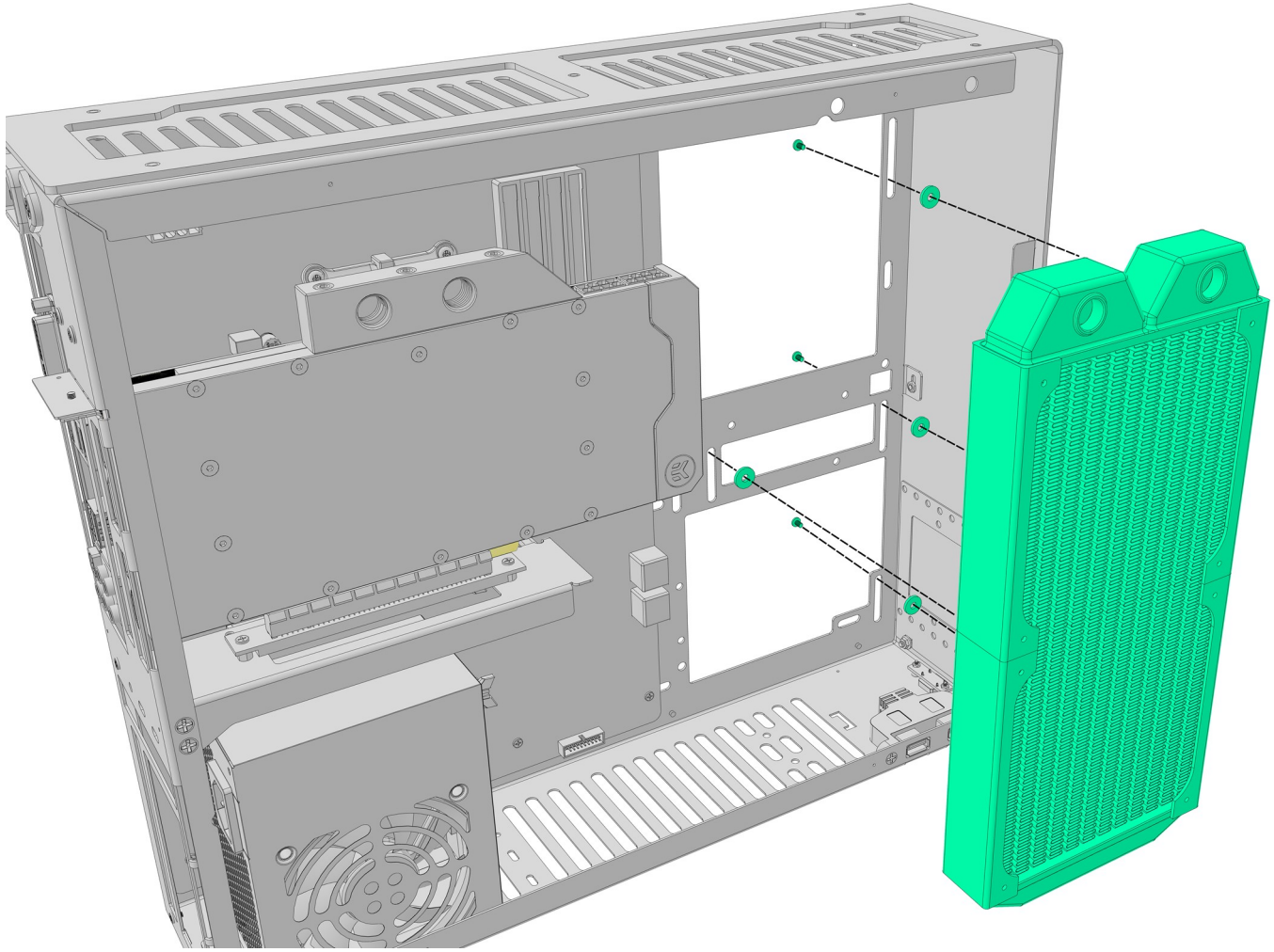

42. Side mounted radiator – rear view

- rear view of 240 mm radiator installation

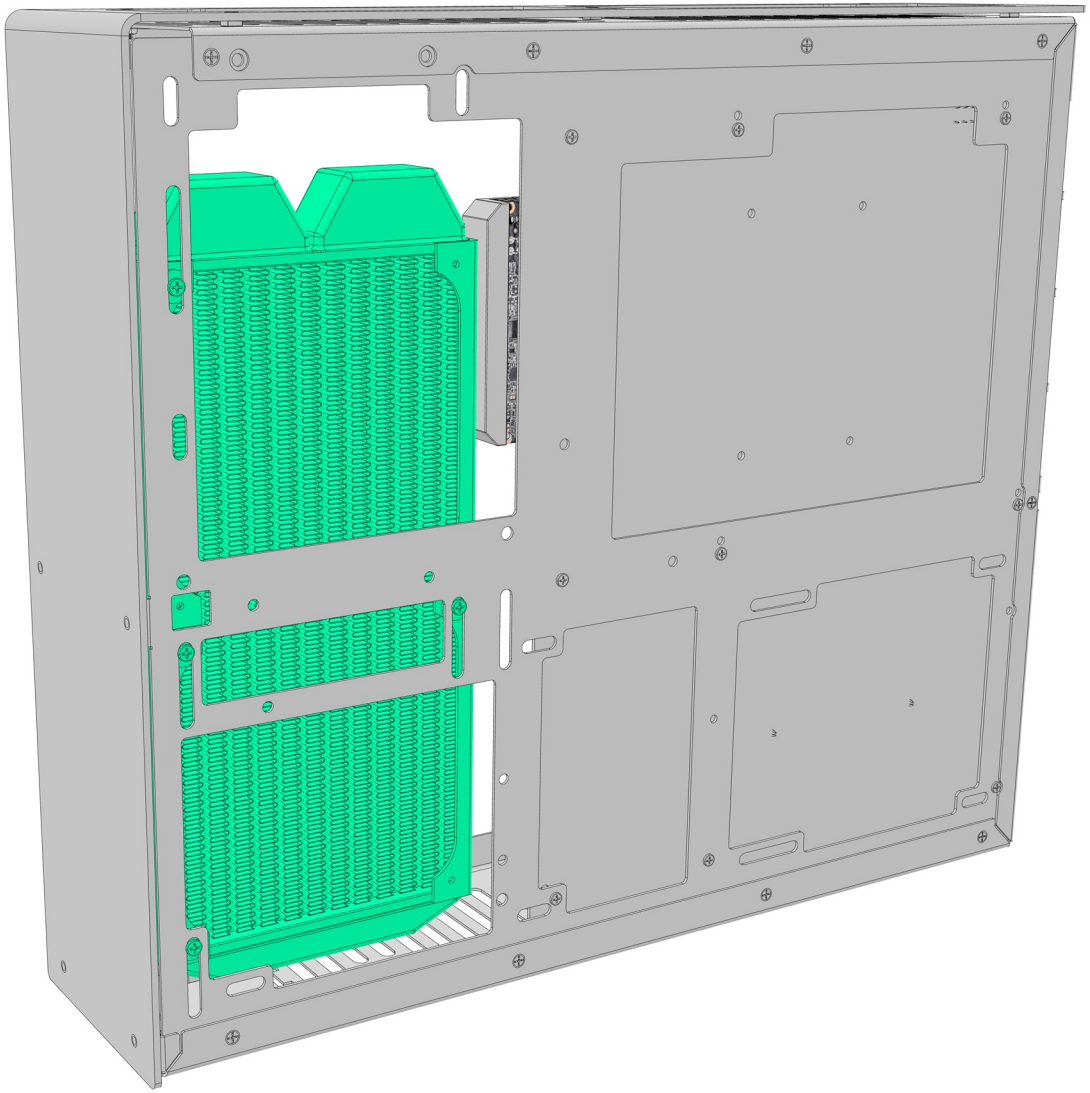

43. Side mounted radiator – complete build

- picture on the right shows complete build with side mounted 240 mm radiator, ATX motherboard and GPU and PSU in alternative positions
- maximum GPU length will depend on radiator size and thickness